REVIEW ARTICLE Agricultural Reviews, Volume 45 Issue 4: 579-589 (December 2024)

Solar Drying Technology for Agricultural Products: A Review

Gajendra Prasad[1], Sudipto Sarkar[1], Laxmi Narayan Sethi[1]

10.18805/ag.R-2457

ABSTRACT

The application of solar drying technology for fruits, vegetables and other crops is one of the most attractive, cost-effective and eco-friendly. Many types of solar dryers have been designed and developed in different parts of the world, having different degrees of technical performance. There are four types of solar dryers: (1) direct solar dryers, (2) indirect solar dryers, (3) mixed-mode dryers and (4) hybrid solar dryers. A synthesis view of the classification of solar energy dryers is also presented. Two groups of solar energy dryers can be identified: Passive or natural-circulation solar energy dryers and active or forced convection solar energy dryers. This paper is a review of all these types of solar dryers, including aspects of the various designs, details of construction and operational principles. Therefore, the selection of dryers for a particular situation is primarily based on what is available and the types of dryers currently used are widely based on available circumstances. Some recent developments in solar drying technology and the appropriateness of each design type for application by farmers in developing countries are also discussed.

Key words: Active solar energy dryer, Hybrid solar dryer, Passive solar energy dryer, Solar drying system, Solar radiation.

Most food crops are lost to fungal and micro bacterial attacks. Drying is one of the oldest and most classical methods of food preservation. It can extend the shelf life of harvested products, improve quality, reduce post-harvest losses and lower transportation costs since most of the water is removed from the product during the drying process.

Drying under adverse conditions may lead to severe losses in the quality and quantity of the product. On the other hand, mechanical drying is an energy-intensive process (Adeyeye *et al*., 2022). Therefore, the Solar drying system is the most promising alternative and energy-efficient option for drying products up to 60°C. Post-harvest losses can significantly be reduced if food crops are dried with the help of solar dryers (Forson *et al*., 2007; Mehta *et al*., 2017). Reducing moisture content to the desired level is the essential function of solar dryers. The moisture content of adequately dried food varies from 5% to 25%, depending upon the food.

Solar drying is different from “open sun drying”. In solar drying, equipment collects solar radiation to harness it for drying applications. In many countries of the Southeast Asian continent, spice crops and herbs are regularly dried. Nevertheless, due to climate conditions, sun drying becomes limited because of spoilage due to rehydration during unforeseen rainy days.

It has also been noticed that direct exposure of agricultural products to solar radiation during high-temperature days may cause case hardening. In the case of hardening, a hard shell develops outside the agricultural products. It traps moisture inside the shell, which may cause spoilage of the agricultural products. Direct sun drying also requires large open space areas and depends on the availability of sunshine; it is susceptible to contamination with foreign materials such as dust and is exposed to birds, insects and rodents. For these reasons, the application of solar dryers with freely available sun energy can be used. Solar dryers also ensure the quality of the dried product (Kumar and Tiwari, 2006; Badgujar *et al*., 2019; Amir *et al*., 2024).

Various solar dryers have been developed in the past to efficiently utilize solar energy. Many studies have been reported on solar drying of agricultural products (Ikechukwu and Norton, 1999; Leon *et al*., 2002). Several studies have been done in the tropics and subtropics to develop solar dryers for agricultural products. There are four types of solar dryers (Ong, 1999): Direct solar dryers, indirect solar dryers, mixed-mode dryers and hybrid solar dryers.

Classification of solar dryers

Solar energy drying systems are classified primarily according to their heating mode and the manner in which the solar heat is utilized (Belessiotis and Delyannis, 2011). In broad terms, they can be classified into two major groups (Ekechukwu, 1987), *viz*. active solar-energy drying systems, which are often termed forced convection solar dryers and passive solar-energy drying systems, are conventionally

[1]Department of Agricultural Engineering, Assam University, Silchar-788 011, Assam, India.

Corresponding Author: Gajendra Prasad, Department of Agricultural Engineering, Assam University, Silchar-788 011, Assam, India. Email: iitkgp.gajendra@gmail.com

How to cite this article: Prasad, G., Sarkar, S. and Sethi, L.N. (2024). Solar Drying Technology for Agricultural Products: A Review. Agricultural Reviews. 45(4): 579-589. doi: 10.18805/ag.R-2457.

Submitted: 28-12-2021 **Accepted:** 18-06-2024 **Online:** 02-09-2024

termed natural-circulation solar drying systems. Fig 1 illustrates a systematic classification of drying systems, indicating the sub-classes and the group lineage of solar drying systems.

Three distinct sub-classes of either active or passive solar-energy drying systems could also be classified into direct, indirect and mixed modes. These modes vary mainly in the design arrangement of system components and the mode of utilization of solar heat. Fig 2 illustrates the main features of the typical design of the various classes of solar dryers (Ekechukwu and Norton, 1997).

Direct and indirect dryers can work on the active and passive mode principle. Active dryers employ external means, such as fans or blowers, to move the heated air from the solar collector to the drying chamber. In contrast, passive dryers use only the natural movement of heated air. In a passive solar dryer, air is heated and circulated by buoyancy force or as a result of wind pressure or a combination of both. They are primitive, inexpensive in construction with locally available materials, easy to install and easy to operate, especially at sites far away from electrical grids. Passive dryers are best suited for drying small batches of fruits and vegetables such as bananas, pineapples, mangoes, potatoes, carrots, *etc.* (Hughes and Oates, 2011).

Direct solar dryer

It is a type of dryer in which the product directly absorbs solar radiation to be dried. Since the solar radiation directly falls on the product, it is also called a natural convection dryer. This dryer comprises a drying chamber covered by a transparent cover made of glass or plastic. The drying chamber is usually a shallow, insulated box with air holes to allow air to enter and exit. Most of the time, the material must remain for a long time outdoors.

Direct type passive solar energy dryer

Solar cabinet dryer

Passive solar cabinet dryers are generally simple and inexpensive units with high domestic applications. They are typically constructed with a drying area of 1-2 m^2 and a capacity of 10-20 kg. The heat for drying is transmitted through the glass cover and absorbed on the blackened interior and crops as well. The required air circulation is maintained by the warm, moist air leaving *via* the upper vent under the action of buoyancy forces, which generates suction of fresh air from the inlet on the bottom.

Halleck *et al*. (1996) developed a modified cabinet dryer (Fig 3). It has the shape of a metal staircase, with its bases and sides covered with double-walled galvanized metal sheets and a cavity filled with non-degradable thermal insulation. Polycarbonate was used to cover the upper surface. The dryer is divided into three compartments with shelves to accommodate the products. The base of the dryer and partition valve have four holes for air circulation. A separate door is provided to access the compartments.

A solar cabinet dryer was developed by Fuller (2002). The temperature in a solar cabinet is higher than that of sun drying, reducing the drying time and usually improving the final product quality. Crop losses and spoilage from rain and animals are prevented because the crop is

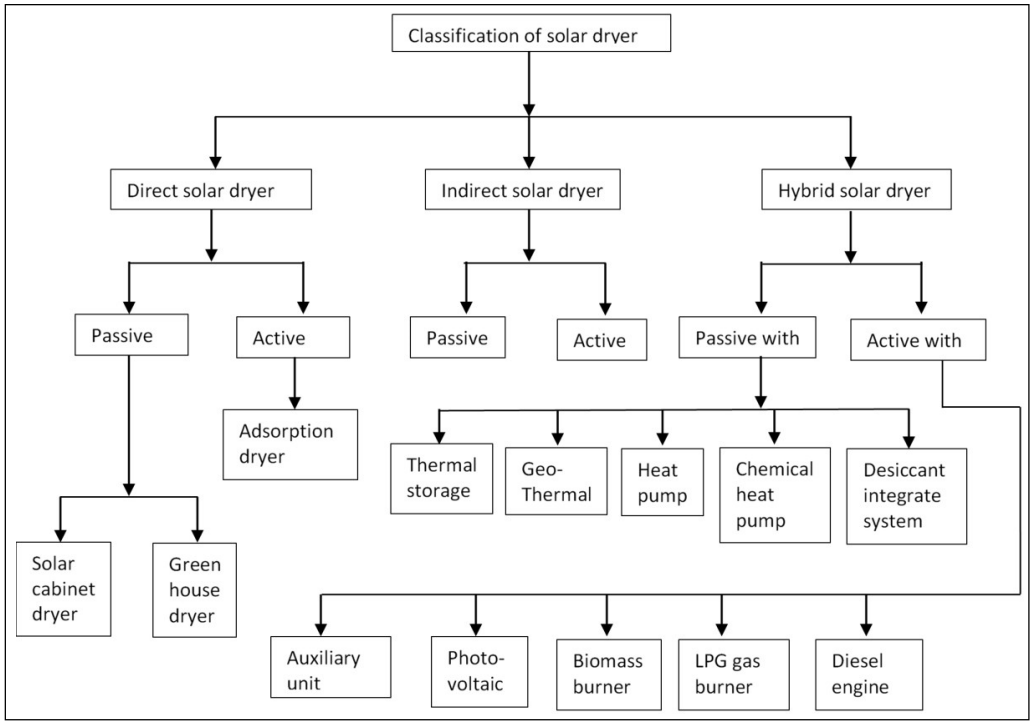

Fig 1: Classification of solar dryers.

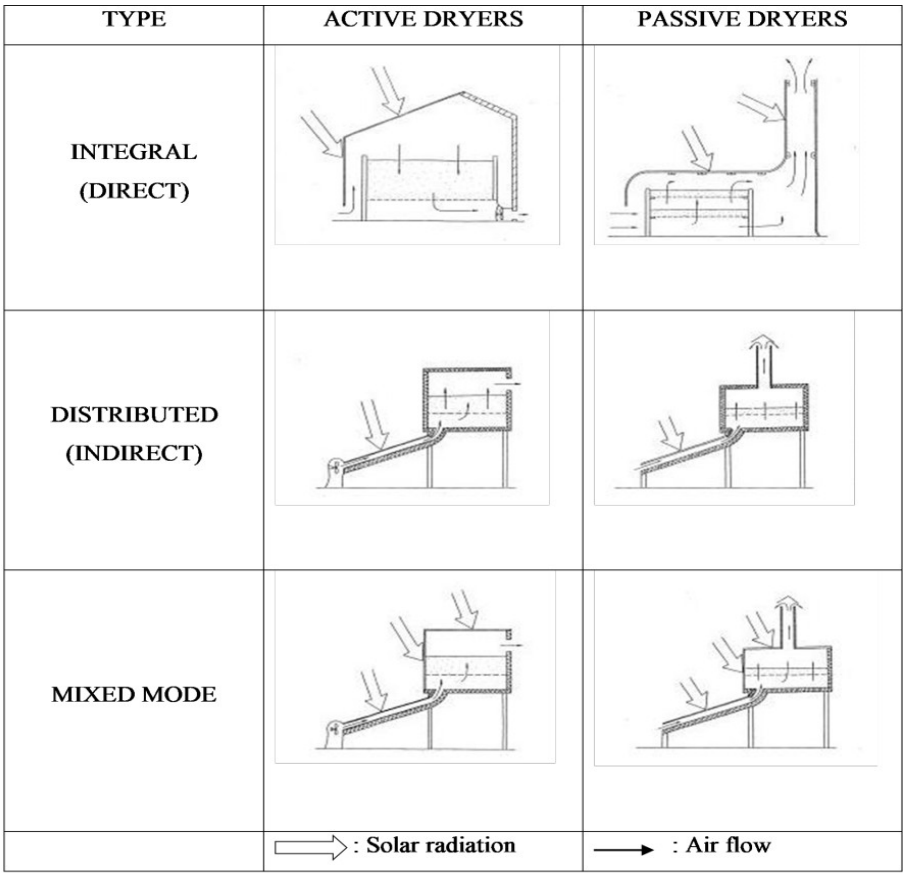

Fig 2: Typical solar energy dryer designs.

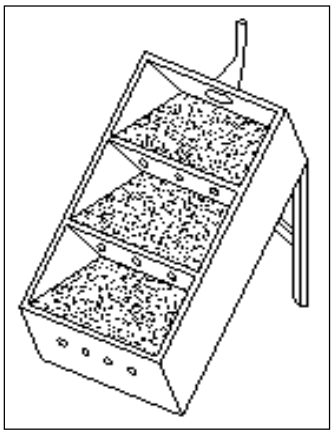

Fig 3: Staircase type cabinet dryer.

protected within the solar dryer. Singh *et al*. (2006) designed a small-size PAU domestic natural convection solar dryer (Fig 4), which consists of a hot box, shading, trays and base frame (size. 19 mm×19 mm×1.6 mm). A transparent window glass (4 mm) was fixed as glazing. Forty holes with a total area of 0.002 m^2 are provided on the top side of the dryer for air circulation. This system generates 55°C to 60°C heated air continuously. This dryer is suitable for drying turmeric rhizomes.

Natural circulation greenhouse dryer

These are also called tent dryers and are basically modified greenhouses. They are designed with vents of appropriate size and position to control airflow. They are characterized by extensive glazing and a transparent polyethene sheet cover.

The earliest form of passive solar greenhouse dryer with a slanted glass roof, allowing direct solar radiation over the product, is shown in Fig 5. The length-wise north-south alignment of the dryer had black coated internals for improved absorption of solar radiation with the ridge-cap over the roof for exit vent. Doe *et al*. (1977) later designed the widely reported polyethene tent dryer, illustrated in Fig 6, consisting of a ridged bamboo framework clad with a transparent polythene sheet over it. A black polyethene sheet was also spread on the floor inside the tent to enhance the absorption of solar radiation. The airflow into the tent was controlled by rolling/ unrolling the cladding at the bottom edge of the front side and the vents at the top served as the exit for the moist exhaust air.

Ekechukwe and Norton (1997, 1999) reported a typical greenhouse natural convection solar dryer (Fig 7). The drying chamber was made up of semi cylindrical galvanized steel framework cladded by a polyethylene sheet. The 1.6 m diameter chimney with varying height facility (maximum

possible height 3 m) was fixed on the rear end of the drying chamber. The front end had a door for the inlet and access to the drying chamber. The crops are dried by directly absorbing solar radiation. No auxiliary power was required to operate the dryer.

Direct type active solar energy dryer

Direct-type active solar dryers are designed with an integrated solar energy collection unit. Generally, three distinct designs of direct-type active solar dryers can be identified: absorption, storage and greenhouse dryers. A direct-mode forced convection dryer essentially consists of a blower to force the air through the product, a chamber and a transparent sheet.

As the name suggests, direct absorption dryers are designs of direct-type active dryers wherein the crops absorb solar radiation directly. Typical practical designs for large-scale commercial forced-convection greenhouse dryers are of the type of solar kilns for timber drying (Fig 8), transparent roof solar brans as shown in Fig 9 and small-scale force-convection dryers equipped with auxiliary heating in Fig 10. Typical designs include with the roof or wall of the dryer functioning as a collector of the drying chamber. Fig 11 shows the greenhouse dryer designed by (Huang and Toksoy, 1981) with a semi cylindrical structure made of a Tedlar-coated clear corrugated fiber-glass and an internal dry chamber of the rotary or stationary drum with a black painted outer surface to affect solar absorption.

Indirect solar dryer

In indirect solar dryers, the black surface heats incoming air rather than directly heating the substance to be dried. The heated air is then passed over the substance and exits through a chimney, taking moisture from it.

Indirect passive solar energy dryer

These are also known as distributed-type natural circulation solar-energy dryers. Here, the crop is located in trays or shelves inside an opaque drying chamber and heated by circulating air. It is warmed during its flow through a low-pressure drop thermo-symphonic solar collector (Norton and Probert, 1984). Because solar radiation is not incident directly on the crop, caramelization and localized heat damage do not occur (Brenndorfer *et al*., 1985; Ekechukwu, 1987). These dryers are also recommended generally for some perishables and fruits for which their vitamin content is reduced considerably by direct exposure to sunlight and for colour retention in some highly pigmented commodities that are also very adversely affected by direct exposure to the sun (Brenndorfer *et al*., 1985). Indirect passive solar dryers have higher operating temperatures than direct dryers or sun drying and can produce higher quality products. Thus, they are recommended for relatively deep-layer drying (Anonymous, 1980). Their shortcomings, however, are the fluctuations in temperatures of the air leaving the air heaters, thereby making it difficult to maintain constant operating conditions within the drying chamber and the operational difficulties



Fig 4: Solar dryer with door open.

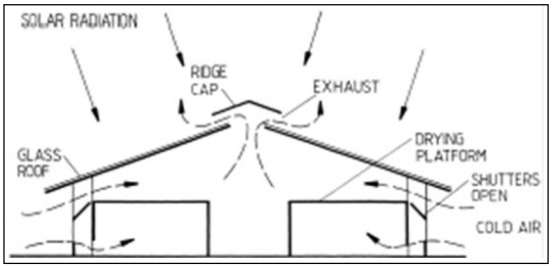

Fig 5: Naturai circulation glass- roof solar- energy dryer (Ekechukwu and Norton, 1999).

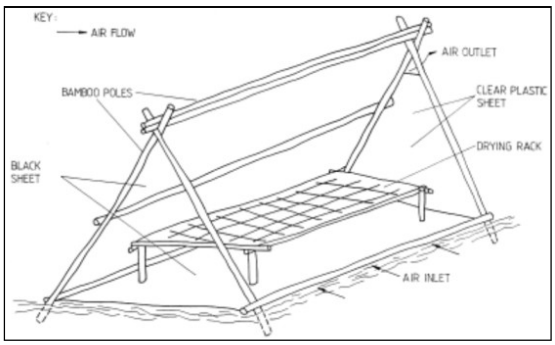

Fig 6: Natural circulation polythene tent dryer (Ekechukwu and Norton,1999).

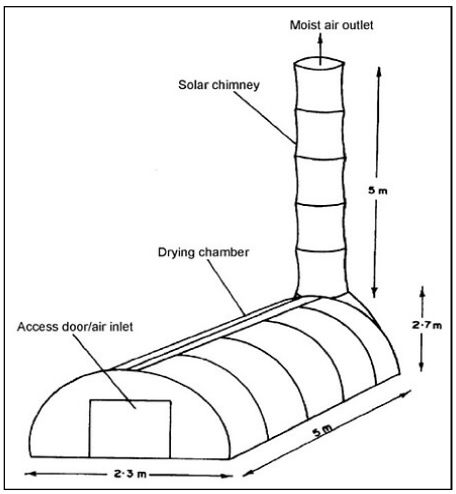

Fig 7: A greenhouse types natural circulation solar energy dryer.

of loading and unloading the trays and occasional stirring of the product (Anonymous, 1980). Indirect-type dryers, though, have an inherent tendency towards greater efficiency, as the component units can be designed for optimal efficiency of their respective functions (Brenndorfer *et al*., 1985). They are, however, relatively elaborate structures requiring more capital investment in equipment and incur more considerable running costs than the integral units (Ekechukwu, 1987).

A typical indirect natural circulation solar energy dryer (Fig 12) would be comprised of the following basic units:

- An air heating solar energy collector.
- Appropriately insulated ducting.
- A drying chamber.
- A chimney.

Azad (2008) designed and developed a natural solar convection dryer (Fig 13), consisting of two parts: Solar collector and solar drying cabinet. Solar collectors with an area of 1.2 m^2 have black painted rocks to absorb solar radiation and a cabinet is divided into five divisions, separated by four removable shelves. Each shelf is 0.3 m wide and 0.5 m long and is made of a nylon wire net framed with a wooden border. Fiberglass sheets cover three sides of the drying chamber walls and a door is in the back. Grapes were dried in the dryer. The moisture content of grapes was reduced from 81.7% to 36.7% within five days of drying. The drying air flows through the product by natural circulation.

Indirect active solar energy dryer

An indirect type active solar dryer is one in which the solar collector and drying chamber are separate units. These active dryers are generally comprised of four essential components, *viz*., a solar air heater, a drying chamber, a fan for air circulation and ducting (Fig 14). Due to separate air heating units, higher temperatures can easily be obtained with a control on air flow rate. However, as the collector's efficiency decreases at higher temperature operations, an optimum temperature and airflow rate must be determined to create a cost-effective design. Though no detailed side-by-side tests have been reported, it is generally agreed that well-designed forced convection indirect solar dryers are more effective and controllable than the natural circulation types (Brooker *et al*., 1974). Thus, most practically-realized indirect solar dryers are of the forced convection type.

Most indirect-type active solar drying systems have similar structural designs that comprise essential components. Modifications to the typical design have been based on the features, *viz*., the solar air heaters, air recirculation and fan/pump location.

Gatea (2011) developed a modified solar drying system with a cylindrical section and analyzed the performance of the thermal drying system. A solar drying system of a cylindrical section, consisting of a flat plate solar air collector, cylindrical drying chamber and a fan, was built and designed to dry 70 kg of bean crop. A maximum temperature of 71.4°C at a radiation intensity of 750 W/m^2 for an airflow rate of 0.0401 kg/s was obtained from the experimental analysis. The maximum average value of thermal efficiency of the solar air collector obtained from the calculation is 25.64% at an airflow rate of 0.0675 kg/s

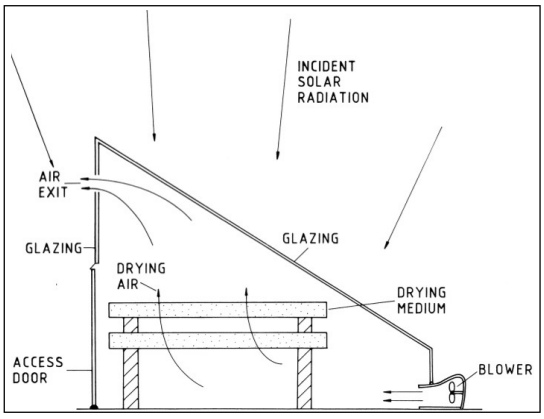

Fig 8: A forced convection greenhouse dryer (Ekechukwu and Norton,1999).

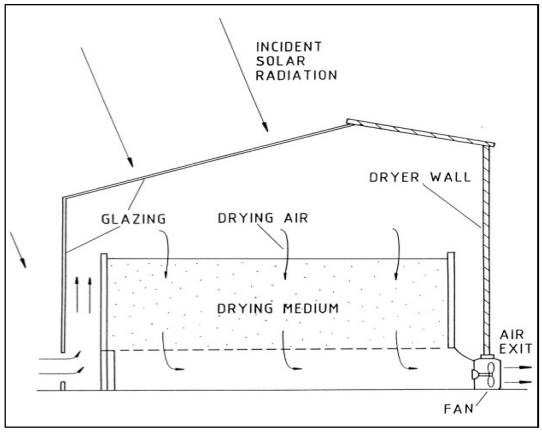

Fig 9: A forced convection transparent roof solar barn (Ekechukwu and Norton,1999).

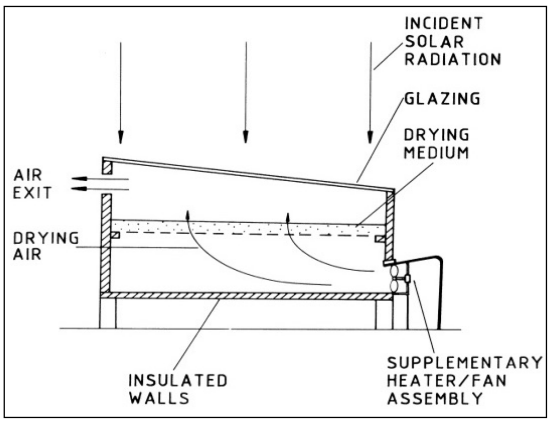

Fig 10: Features of a typical active solar energy cabinet dryer (Ekechukwu and Norton,1999).

and the maximum daily efficiency of the drying system was 18.41% at an airflow rate of 0.0405 kg/s.

Mixed mode natural circulation (passive) solar dryer

These dryers combine the features of the integral (direct) type and the distributed (indirect) type natural-circulation solar-energy dryers. Here, the combined action of solar radiation incident directly on the product to be dried and pre-heated in a solar air heater furnishes the necessary heat required for the drying process (Fleming *et al*., 1987; Norton *et al*., 1987; Fleming *et al*., 1986). A typical mixed-mode natural circulation solar energy dryer would have the same structural features as the indirect type (*i.e*. a solar air heater, a separate drying chamber and a chimney). However, the walls of the drying chamber are glazed so that the solar radiation impinges directly on the product as in the direct type dryer (Fleming *et al*., 1987; Norton *et al*., 1987; Fleming *et al*., 1986).

Considerable research on the design and application of these dryers has been conducted. A design (Fig 15) consisted of an air heater with a pile of granite to work as absorber cum heat storage, insulated from the base ground by a 5 cm thick layer of straw. A single layer of glass was used as a glazing. The drying chamber, made of plywood sides with a glazed top, held three layers of wire mesh for its products. Access to the chamber was via removable panels at the rear. The cylindrical chimney, 30 cm in diameter and 1.9 m high above the chamber was made from matt black painted galvanized iron sheets fitted with a metal cap at the top to keep out the rain (Ayensu and Asiedu-Bondzie, 1986).

Mixed mode active solar-energy dryers

Mixed mode designs combine some features of the direct and indirect types. Typical designs (Akyurt *et al*., 1972; Selcuk *et al*., 1974) would comprise the following components: A solar air heater, air ducting, a separate drying chamber and a fan/pump as in an indirect type dryer. However, the drying chamber is glazed so that the product absorbs solar radiation directly, as in a direct solar dryer. Features of an active mixed-mode solar dryer are illustrated in Fig 16.

To achieve more efficient energy use, some active solar dryers are equipped with thermal storage devices, mostly rock bed or gravel storage (Duffie and Close, 1978; Alberti and Serravezza, 1979; Bern *et al*., 1980; Misra *et al*., 1982; Maroulis and Saravacos, 1986). This improves drying during nighttime or periods of low insolation levels. Desiccants are incorporated in some designs (Ko and Merrifield, 1977; Bern *et al*., 1981; Fletcher, 1981; Burell, 1982; Miller, 1983) to further reduce the relative humidity of the drying air to improve its moisture-carrying capacity. The use of desiccants would only be appropriate for forced convection systems, as their incorporation into the system increases the resistance to airflow. Finally, as indicated earlier, large-scale commercial active solar dryers employ mostly air-heating solar collectors to supplement electricity or fossil fuel-fired dehydrators to reduce overall conventional energy consumption.

Pardhi and Bhagoria, (2013) evaluated forced convection in a mixed-mode sola performance dryer. This system consists of solar collectors, drying cabinets and blowers (Fig 17). The collector absorber plate material is black coated aluminium sheet with 1.5 m×0.2 m×0.03 m in size. The glazing is a 0.004 m thick transparent glass sheet. The mixed-mode drying cabinet comprises 0.01905 m plywood and a wooden bar. The measurement of the top glazing is 0.55 m×0.5 m, two sides of the drying cabinet measure 0.64 m ×0.32 m, the door measures 0.52 m×0.5 m and the opposite side of the door measures 0.54 m×0.5 m.

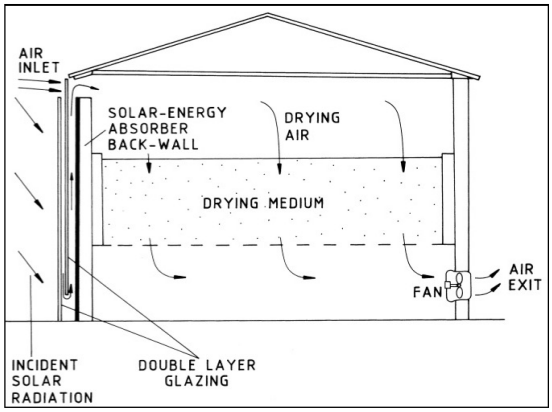

Fig 11: Interior drum absorber greenhouse active solar dryer (Ekechukwu and Norton,1999).

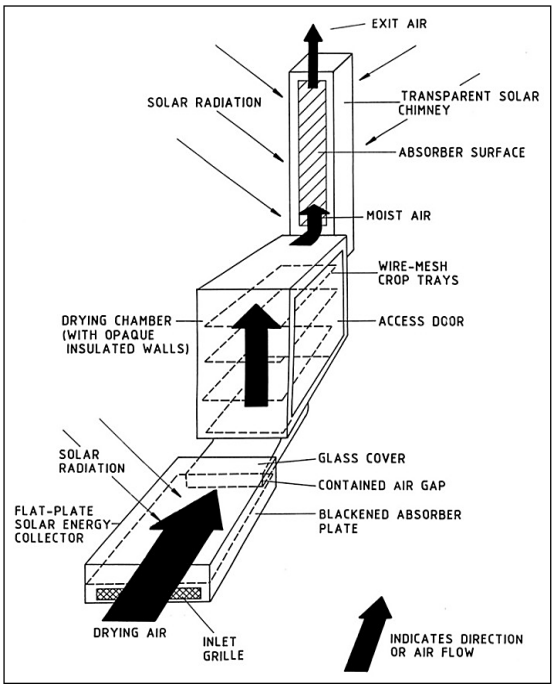

Fig 12: A typical indirect (distributed-type) natural circulation solar energy dryer (Ekechukwu and Norton,1999).

The temperature increase in the drying cabinet was up to 22°C above the ambient temperature. A mixed-mode dryer reduced the moisture from 81.4% to 18.6% within four days, while it took eight days in the open sun drying.

The requirements of fossil-fuel-driven fans and/or the use of auxiliary heating sources improve the efficiency of these dryers, but they render their capital, maintenance and operational costs prohibitive for small-scale farming operations. Clearly, they are inappropriate for remote rural village farms in most developing countries.

Hybrid solar dryer

Hybrid with biomass burner

A direct-type natural convection solar dryer integrated with a simple biomass burner was developed (Fig 18) and evaluated for drying of turmeric rhizomes by Prasad *et al*., 2006. Drying was done in the developed system with hot air temperature between 55 to 60°C. Dried turmeric rhizomes obtained by two different treatments, *viz*. water boiling and slicing, were found to be similar in quality concerning physical appearance like colour, texture, *etc.*, but with significant variations in volatile oil. The quantitative analysis showed that traditional drying, *i.e.*, open sun drying, took 11 days to dry the rhizomes, while solar biomass drying took only 1.5 days and produced better quality produce. The efficiency of the whole unit obtained was 28.57%. The system is intended for small farmers in developing countries due to its low investment cost.

Hybrid with thermal storage

Madhlopa and Ngwalo (2007) have designed, constructed and evaluated an indirect type natural convection solar dryer with integrated solar collector storage and biomass-backup heater (Fig 19). The major components of the dryer were biomass burner, collector-storage thermal mass and drying chamber. The thermal mass had been placed in the top part of the biomass burner enclosure. The dryer was fabricated using simple materials, tools and skills. It was tested in three modes of operation (solar, biomass and solar-biomass) by drying 12 batches of fresh pineapple. Each batch consisted of about 20 kg. Results showed that the thermal mass could only store part of the absorbed solar energy on clear days. Drying proceeded successfully, even under unfavourable weather conditions in the solar-biomass mode of operation. In this operational mode, the dryer reduced the moisture content of pineapple slices from about 66% to 11% (d.b.). It yielded a nutritious dried product. The average value of the final day moisture pickup efficiency was 15%, 11% and 13% in the solar, biomass and solar-biomass modes of operation, respectively. The solar dryer appeared suitable for preserving pineapples and other fresh foods.

Hybrid with electrical heater

Boughali *et al*. (2009) studied the indirect active hybrid solar electrical dryer (Fig 20), constructed and installed at LENREZA Laboratory, University of Ouargla, Algeria. It comprises a flat plate solar collector, drying chamber, electric fan, resistance heater (3.73 KW: accuracy±2%) and a temperature controller.

The solar air collector has an area of 2.45 m^2 and is inclined at an angle of 31° (the latitude of Ouargla city) with the horizontal. In the solar dryer process, the auxiliary heater was used to adjust the drying air temperature.

The preliminary heated drying air by solar radiation arrived at the inlet of the cabinet dryer and was heated by electrical resistance. If its temperature is less than the consign temperature, which is controlled thermostatically and then aspired by an exhaust fan through the product to the environment.

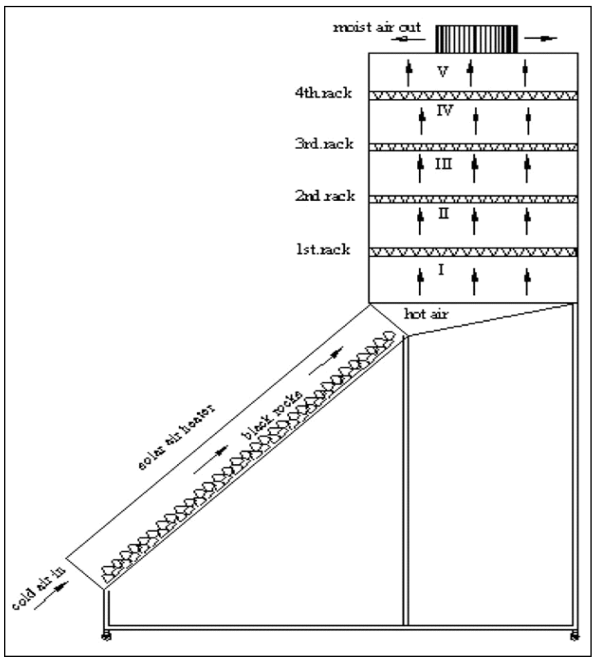

Fig 13: A natural convection solar dryer.

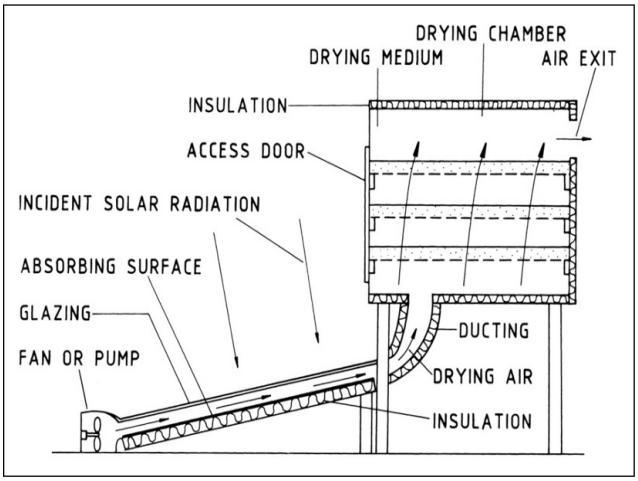

Fig 14: Features of a typical indirect type active solar dryer (Ekechukwu and Norton,1999).

Solar dryer integrated with regenerative desiccant system

A solar dryer integrated with a desiccant bed has been developed by Shanmugam and Natrajan (2007). It was used for drying the green peas and pineapple slices with and without a reflective mirror, as shown in Fig 21. Inclusion of a reflective mirror on the desiccant bed increased the drying potential considerably. The system comprises a forced circulation flat plate solar air collector, a drying chamber and a desiccant unit. The desiccant bed is a mixture of 60% bentonite, 10% calcium chloride, 20% vermiculite and 10% cement by weight. This bed provides a better drying effect during off-sun shine hours. The system is studied for green peas drying for different air flow rates. The same regenerative desiccant integrated solar dryer experimental set-up was also examined with and without a reflective mirror and 20% increased desiccant material. A rise in temperature of about 10°C was achieved with a mirror. It reduced the drying time by 2 h and 4 h for green peas and pineapple, respectively. The pick-up efficiency, drying rate and average dryer thermal efficiency were relatively higher when compared to solar drying and desiccant-integrated drying.

Hybrid with photovoltaic

A dish-type solar dryer integrated with photovoltaic cells was designed (Fig 22) and studied by Hanif *et al*. (2012). It comprises three components: concentrating reflector and absorber, drying box and photovoltaic cell. The concentrating reflector is a concave mirror that concentrates the heat on the absorber, which heats the incoming air. The heated air is delivered to the drying box. The drying box has two internal chambers. The lower chamber is filled with black painted rocks for energy storage while the upper chamber is provided for product drying. The photovoltaic module provides a 12 V DC output to run a fan connected to the absorber. This dryer is suitable for drying grapes at 50°C with less than 20% humidity.

Hybrid with LPG gas burner

Smitabhindu *et al*. (2008) have developed a drying system that consists of two main parts, namely: (1) the solar collector and (2) the drying cabinet (Fig 23). The solar collector was kept on the rooftop of the drying building and the drying cabinet was inside the building. The solar collector contained polyurethane back insulator and cover glass. There was an air gap in between the cover glass and the insulator, in which ambient air sucked from both ends of the roofs through the collectors. The air was sucked at the midpoint of the collector and supplied into the drying cabinet with an auxiliary heat source using an LPG gas burner. Each part of the collector was designed with a modular concept. Parts of the collector, such as insulation and cover glass, were in modular form so that these could easily transport and connect. The tray type drying cabinet accommodated 15 trays in stacks with a total drying area of 8 m^2. The dimensions of the tray were 1 m×2 m×1.5 m. The drying cabinet had been specially designed so hot air was guided to flow parallel through the products placed in the trays in the stacks. This design had the advantage that air temperatures in the cabinet were uniform. The solar collector preheated the ambient air. An electrical blower

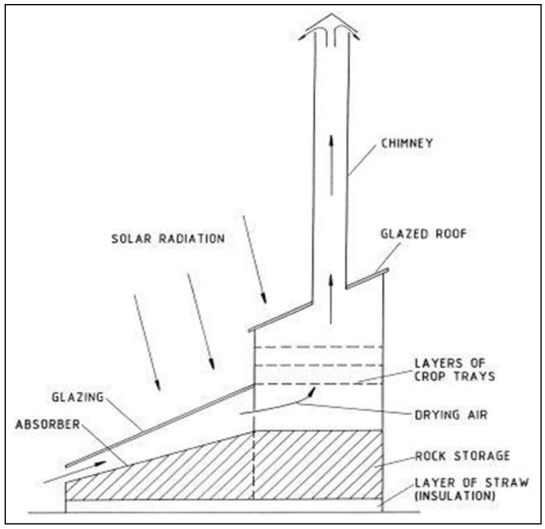

Fig 15: A mixed mode natural circulation solar energy dryer with thermal storage (Ekechukwu and Norton,1999).

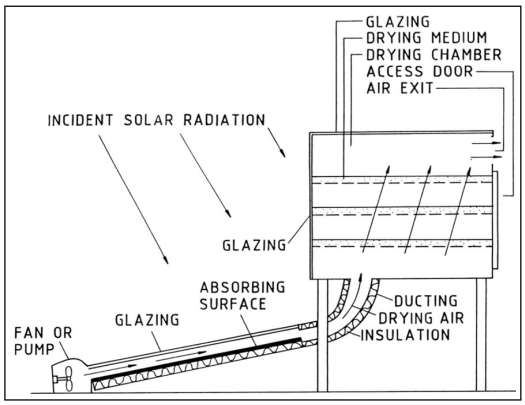

Fig 16: Features of a typical mixed-mode active solar energy dryer (Ekechukwu and Norton, 1999).

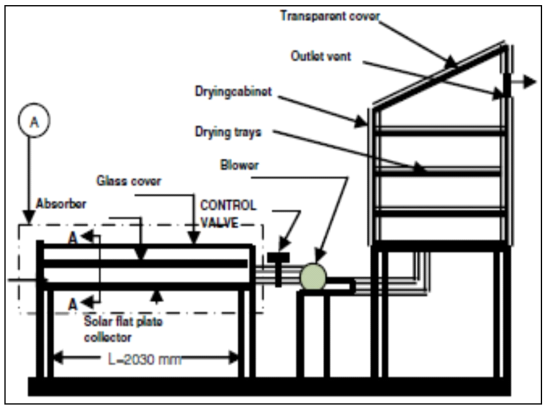

Fig 17: Schematic diagram of mixed mode solar.

sucked it and additional heat, if needed, was supplied by an LPG gas burner. Then, hot air was supplied to the cabinet.

Hybrid with geo-thermal or waste-waters

Ivanovo *et al*. (2003) developed a solar dryer integrated with geothermal or wastewater systems (Fig 24). They studied the economic effectiveness of a fruit and vegetable hybrid dryer at the University of Rousse, Bulgaria. The drying agent could be heated using solar energy, geothermal or wastewater energy, a conventional source, or both conventional and unconventional energy sources.

32.2% of the annual thermal load was secured using geothermal waters at 68°C. The temperature of the drying agent was maintained at 60°C during the day and night.

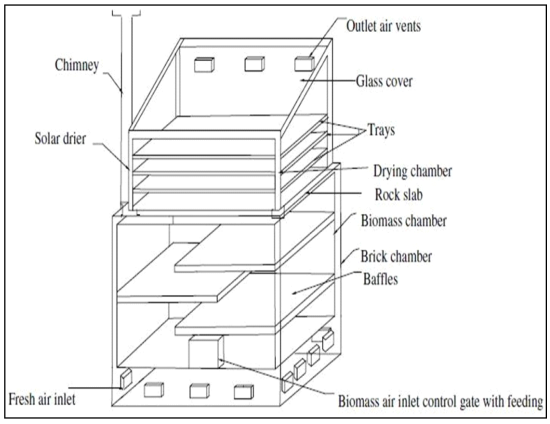

Fig 18: Schematic diagram of solar biomass.



Fig 21: Pictorial view of the desiccant integrated solar.

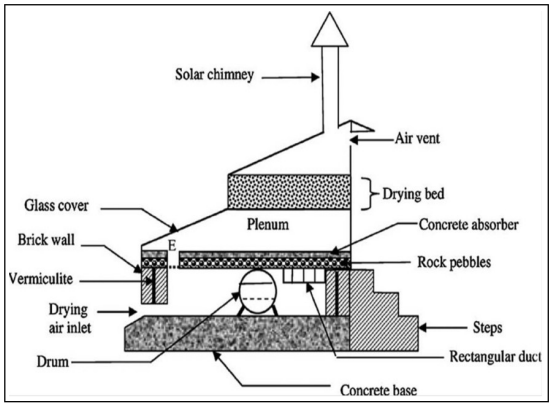

Fig 19: Cross-sectional view of the solar dryer through the burner, collector, drying chamber and solar chimney.

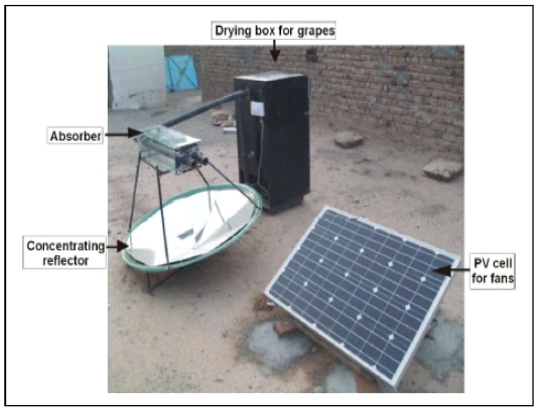

Fig 22: Dish type solar collector.

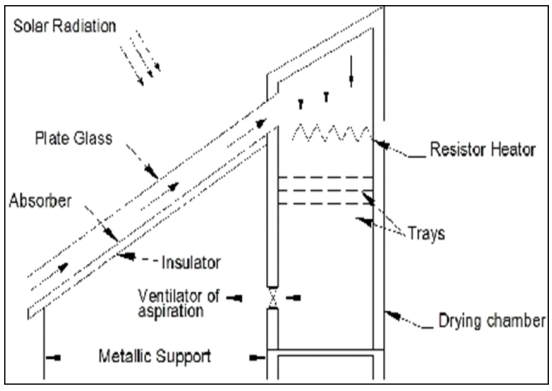

Fig 20: Schematic diagram of an indirect active solar electrical dryer.

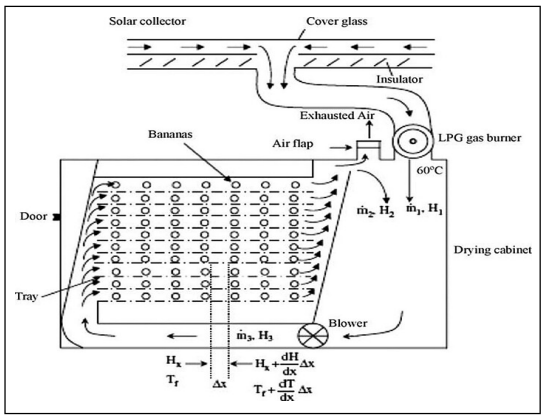

Fig 23: An illustration of solar drying system with LPG burner.

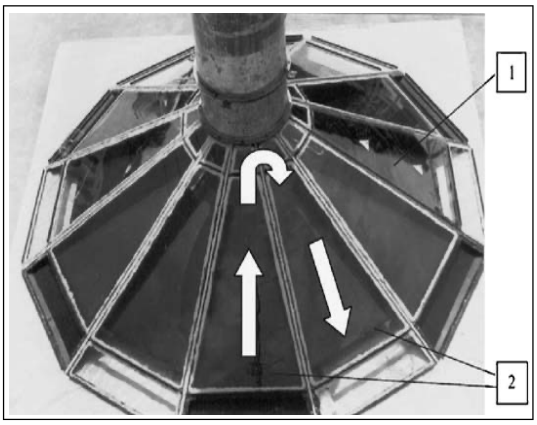

Fig 24: General view of the geothermal hybrid dryer.

The use of hot geothermal or waste water during the night and solar energy during the day gained 26% of the annual thermal load.

CONCLUSION

The use of solar drying for fruits, vegetables and other crops has enormous potential not only from an energy-saving point of view but also from a quality point of view. Many types of solar dryers have been designed and developed in different parts of the world, having different degrees of technical performance. The designs, construction details and operational principles of various solar energy drying systems have been described. Two major groups of solar dryers can be identified: passive or natural-circulation solar dryers and active or forced convection solar dryers. Four distinct sub-classes of active or passive solar-energy drying systems could be classified into direct, indirect, mixed mode and hybrid dryer, which vary mainly in the design arrangement of system components and the mode of utilization of the solar heat. Scientifically designed active solar dryers are generally more effective and controllable than the natural-circulation types. In most of the active solar dryers, the fan is driven by the solar photovoltaic cell. It makes the active dryer independent from fossil fuel/electricity dependency. Therefore, solar photovoltaic-thermal (PV/T) dryers are agreed to be suitable for remote rural village farm applications in most developing countries.

Conflict of interest

There is no conflict of interest among all authors. All have contributed as per the role in research work.

REFERENCES

Adeyeye, S.A.O., Ashaolu, T.J. and Babu, A.S. (2022). Food drying: A review. Agricultural Reviews. doi: 10.18805/ag.R-2537.

Akyurt, M., Ozdaglar, I. and Selcuk, M.K. (1972). A solar dehydrator for orchards. COMPLEX Conf, Istanbul, Turkey. Alberti, P. and Serravezza, A. (1979). Autonomous Solar-energy Plant for Drying of Agricultural Produce. In: Proc Solar Energy Symp, The Utilization of Solar Heat in Industry and Agric. Nice, France. pp 143-155.

Amir, M., Singh, N. and Upadhyay, R. (2024). Solarized IPM module for biocontrol of root-knot nematode on tomato at nursery level in District G.B Nagar, Uttar Pradesh. Agricultural Science Digest. 44(3): 518-522. doi: 10.18805/ag.D-5863.

Anonymous. (1980). Types of Solar Agricultural Dryers Sunworld. Brace Research Institute. 4(6): 181.

Ayensu, A. and Asiedu-Bondzie, V. (1986). Solar drying with convective self-flow and energy storage. Solar and Wind Technol. 3: 273-279.

Azad, E. (2008). Design and experimental study of solar agricultural dryer for rural area. Livestock research for rural development, Soar Energy Laboratory, Iranian Research Organization for Science and Technology (IROST), forsat Avenue, Tehran, Iran. 20(9).

Badgujar, C.M., Karpe, O.S. and Kalbande, S.R. (2019). Studies on drying characteristics and techno-economic analysis of sprouted moth beans (*Vigna aconitifolia*) in solar tunnel dryer. Indian J. Agric. Res. 53(2): 151-157. doi: 10.18805/IJARe.A-5180.

Belessiotis, V. and Delyannis, E. (2011). Solar drying. Solar Energy. 85: 1665-1691.

Bern, C.J. anderson, M.E., Monson, M.J. and Wilke, W.F. (1981). Corn drying with solar-dried desiccant. Agric Energy. 1: 89-94.

Bern, C.J., Patton, M. and Anderson, M.E. (1980). Intermediate temperature solar corn drying. ASAE paper. 80-3022.

Boughali, S., Benmoussa, H., Bouchekima, B., Mennouche, D., Bouguettaia, H. and Bechki, D. (2009). Crop drying by indirect active hybrid solar electrical dryer in the Eastern Algerian Septentrional Sahara. Sol. Energy. 83: 2223-2232.

Brenndorfer, B., Kennedy, L., Bateman, C.O.O., Mrema, G.C. and Brobby, C.W. (1985). Solar dryers-their role in post-harvest processing. Commonwealth Science Council, Publications, C.S., London.

Brooker, D.B., Bakker-Arkema, F.W. and Hall, C.W. (1974). Drying cereal grains. AVI Publishing Company, Inc., Westport, Connecticut.

Burell, N.J. (1982). Energy Storage for Grain Drying. In: 2nd Int Sem Energy Conserv and Use of Renewable Energies in the Bio-industries and Agric. Vogt F, editor. 2: 137-153.

Doe, P.E., Ahmed, M., Muslemuddin, M. and Sachithananthan, K.A. (1977). A polythene tent dryer for improved sun drying of fish. Food Tech. Aust. 29: 437-441.

Duffie, N.A. and Close, D.J. (1978). The optimization of a solar timber dryer using an adsorbent energy store. Solar Energy. 20: 405-411.

Ekechukwe, O.V. and Norton, B. (1997). Design and measured performance of a solar chimney for natural circulation solar energy dryers. Renew. Energy. 10(1): 81-90.

Ekechukwe, O.V. and Norton, B. (1999). Review of solar energy drying system II, An overview of solar drying technology. Energ. Convers. Manage. 40: 616-655.

Ekechukwu, O.V. (1987). Experimental studies of integral-type natural-circulation solar-energy tropical crop dryers. Ph.D Thesis Submitted to Cranfield Institute of Technology, Cranfield, UK.

Ekechukwu, O.V. (1999). Review of solar-energy drying systems I: An overview of drying principles and theory. Energy Conversion and Management. 40: 593-613.

Fleming, P.D., Ekechukwu, O.V., Norton, B. and Probert, S.D. (1987). Design, installation and preliminary testing of natural-circulation solar-energy tropical crop dryer solar drying in Africa, Dakar, Senegal. pp. 147-161.

Fleming, P.D., Norton, B., Ekechukwu, O.V., Onyegegbu, S.O. and Probert, S.D. (1986). A large-scale facility for experimental studies of natural-circulation solar-energy tropical crop dryers. Proceedings of the International Drying Symposium (Drying '86), Cambridge, Massasustates., USA, Hemisphere Publishing Company, Washington.

Fletcher, J.W. (1981). Performance of an experimental annual cycle solar regenerated desiccant dryer. Agric Energy. 1: 95-109.

Forson, F.K., Nazha, M.A.A., Akuffo, F.O. and Rajakaruna, H. (2007). Design of mixed-mode natural convection solar crop dryers: Application of principle and rules of thumb. Renew. Energy. 32: 2306-2319.

Fuller, R.J. (2002). Solar energy conversion and photo energy systems-Solar Drying-A Technology for Sustain. Agriculture and Food Production, UNESCO-EOLSS, France.

Gatea, A.A. (2011). Design and Construction of a solar drying system, a cylindrical section and analysis of the performance of the thermal drying system. African J. Agr. Res. 6(2): 343-351.

Hallack, H., Hilal, J., Hilal, F. and Rahhal, R. (1996). The staircase solar dryer: Design and characteristics. Renew. Energy. 7(2): 177-183.

Hanif, M., Ramzan, M. and Aamir, M. (2012). Drying of grapes using a dish-type solar heater. J. Agric Res. 50: 423-432.

Huang, B.K. and Toksoy, M. (1981). Greenhouse solar system for selective year-round solar-energy utilization in agricultural production. Agric Energy. pp. 1-152.

Hughes, B.R. and Oates, M. (2011). Performance investigation of a passive solar-assisted kiln in the united kingdom. Solar Energy. 85: 1488-1498.

Ivanova, D., Enimanev, K.R. and Andonov, K. (2003). Energy and economic effectiveness of fruit and vegetable dryer. Energy Conversion and Management. 44: 763-809.

Ko, S.M. and Merrifield, D.V. (1977). Energy-efficient Desiccant Drying/Dehumidification using Solar or Fossil Fuel Energy. In: Proc 12th Int Solar Energy Convers Engng Conf., Washington, U.S.A. 434-441.

Kumar, A. and Tiwari, G.N. (2006). Thermal modelling of a natural convection greenhouse drying system for jaggery: An experimental validation. Solar Energy. 80: 1135-1144.

Leon, M.A., Kumar, S. and Bhattacharya, S. C. (2002). A comprehensive procedure for performance evaluation of solar food dryers. Renewable and Sustainable Energy Reviews. 6: 367-393.

Madhlopa, A. and Ngwalo, G. (2007). Solar dryer with thermal storage and biomass backup heater. Solar Energy. 81: 449-62.

Maroulis, Z.B. and Saravacos, G.D. (1986). Solar heating of air for drying agricultural products. Solar Wind Technol. 3(20): 127-134.

Mehta, D., Sharma, A., Yadav N., Alam, T. and Bhardwaj, A. (2017). Comparative studies on dehydration of mint (*Mentha arvensis*) by open sun drying, solar drying and hot air cabinet drying. Asian Journal of Dairy and Food Research. 36(2): 150-155. doi: 10.18805/ajdfr.v36i02.7961.

Miller, W.M. (1983). Energy storage *via* desiccants for food/agricultural applications. Energy in Agric. 2(4): 341-354.

Misra, R.N., Keener, H.M. and Rollex, W.L. (1982). Solar heat for corn drying under ohio conditions, Part II. Summer storage of solar heat. Trans. ASAE. 25: 459-464.

Norton, B. and Probert, S.D. (1984). Solar energy stimulated open-looped thermosyphonic air heaters. Appl. Energ. 17: 217-234.

Norton, B., Fleming, P.D. and Ekechukwu, O.V. (1987). Passive autarkic solar drying techniques. Proceedings of the Physics and Technology of Solar Energy, New Delhi, India, D Reidal, Netherlands.

Ong, K.S. (1999). Solar dryers in Asia-Pacific region. Renewable Energy. 16: 779-784.

Pardhi, C.B and Bhagoria, J.L. (2013). Development and performance evaluation of mixed mode solar dryer with forced convection. Int. J. Energy Environ. Eng. 4: 23.

Prasad, J., Vijay, V.K., Tiwari, G.N. and Sorayan, V.P.S. (2006). Study on performance evaluation of hybrid drier for turmeric (*Curcuma longa* L.) drying at village scale. J. Food Eng. 75: 497-502.

Selcuk, M.K., Ersay, O. and Akyurt, M. (1974). Development, theoretical analysis and performance evaluation of shelf-type solar dryers. Solar Energy. 16: 81-108.

Shanmugam, V. and Natarajan, E. (2007). Experimental study of regenerative desiccant Integrated solar dryer with and without reflective mirror. Appl. Therm. Eng. 27: 1543-1551.

Singh, P.P., Singh, S. and Dhaliwal, S.S. (2006). Multi-Shelf Domestic Solar Dryer. Energ. Convers. Manage. 47: 1799-1815.

Smitabhindu, R., Janjai, S. and Chankong, V. (2008). Optimization of a solar-assisted drying system for drying bananas. Renew Energy. 33: 1523-1531.