RESEARCH ARTICLE

Design and Development of Temperature and Humidity Monitoring System

RN Sonawane[1*], AS Ghule[2], AP Bowlekar[3], AH Zakane[4]

10.18805/ag.D-4893

Abstract

The temperature and humidity monitoring system was developed using various components viz., Arduino Uno, DHT11 sensor, universal serial bus (USB) type B cable, adaptor, DC power jack, 9-V battery connector, 9-V DC battery, resistor, liquid-crystal display (LCD) screen, trimmer potentiometer, light-emitting diode (LED) bulbs, jumper wires, micro secure digital (SD) card module, printed circuit board (PCB), etc. The field testing of the developed temperature and humidity monitoring system was carried out at various locations of the college campus. It was observed that the system worked between the percent variation of 0–8.00% for temperature and 0–5.97% for humidity. The developed system showed the accuracy of ±2°C for temperature and ±4% for humidity. The total cost incurred for the development of temperature and humidity monitoring system along with all accessories was ₹1625.

Keywords: Arduino Uno, DHT11, Light-emitting diode, Liquid-crystal display screen, Printed circuit board.

Agricultural Science Digest (2019)

Introduction

Nowadays, agriculture doesn't only limit to cultivate crops rather following a convenient and efficient way to grow more crops (Saha *et al.,* 2017). The demand and usefulness of greenhouse technology are increasing with the increase in population, and there is no alternative of it to cope with epicurean lifestyles of people. Also, it is not convenient to rely on natural climatic conditions in agriculture (Saranya *et al.*, 2017).

The temperature of the environment is extremely important for plants as it affects multiple growing factors: the rates of photosynthesis and respiration, germination, flowering, and ultimately, crop quality (Rowinski, 2016). Extreme temperatures can negatively impact plant productivity, so maintaining the temperature in a greenhouse is crucial. Each plant also has its specific temperature range, so being able to adjust the settings in the greenhouse is equally as important (Kale and Kulkarni, 2016).

Humidity is the measure of how much moisture is present in the air. When plants transpire, water vapor along with molecules of a gas is released from the stomata on the underside of the leaves, increasing the humidity (Shah and Mehta, 2017). High humidity can be fatal to plants if it is not monitored, as a build-up of moisture on plants promotes the germination of fungal pathogen spores such as Botrytis and powdery mildew. It is therefore important to make sure that air is circulating through the greenhouse to reduce the water vapor around the plants (Rowinski, 2016).

This paper presents the design and development of temperature and humidity monitoring system using Arduino board.

Materials and Methods

Hardware Connections and Connectivity

As shown in Figure 1, the different hardware components, temperature, and humidity sensor, LCD screen, micro SD card module and LED indicators are connected to the Arduino Uno (controller). The controller is connected to the power supply.

Power Supply

Temperature and humidity sensor, LCD screen and LED are connected to the Arduino Uno (controller) which works on 9 Volt DC supply. Nine Volt DC @ 2 Ampere supply is used to power Arduino Uno. Temperature and humidity sensor, LED

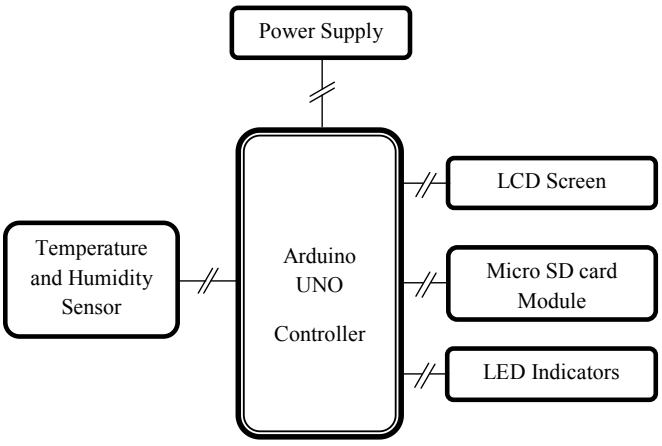

Fig. 1: Hardware connections and connectivity

[1-4]Dr. Budhajirao Mulik College of Agricultural Engineering and Technology, Mandki-Palvan, Chiplun, Ratnagiri, Maharashtra, India

Corresponding Author: RN Sonawane, Dr. Budhajirao Mulik College of Agricultural Engineering and Technology, Mandki-Palvan, Chiplun, Ratnagiri, Maharashtra, India, e-mail: rushikeshsonawane.2014@gmail.com

How to cite this article: Sonawane, R. N., Ghule, A. S., Bowlekar, A. P., & Zakane, A. H. (2019). Design and Development of Temperature and Humidity Monitoring System. Agri Sci Diges, 39(2):114-118.

Source of support: Nil

Conflict of interest: None

Submitted: 21/02/2019 **Accepted:** 29/04/2019

indicators and LCD screens are powered through Arduino UNO, 9 Volt output (Shirsath *et al.,* 2017).

USB Type B Cable

USB type B connectors officially referred to as Standard-B connectors, are square with either a slight rounding or large square protrusion on the top, depending on the USB version. USB Type-B connectors are supported in every USB version, including USB 3.0, USB 2.0, and USB 1.1. The second type of "B" connector, called Powered-B, also exists but only in USB 3.0

Adaptor

An (electrical) adapter is a device that converts attributes of one electrical device or system to those of an otherwise incompatible device or system. Some modify power or signal attributes, while others merely adapt the physical form of one electrical connector to another.

DC Power Jack

A DC connector (or DC plug, for one common type of connector) is an electrical connector for supplying direct current (DC) power.

9-V Battery Connector

The battery has both terminals in a snap connector on one end. The smaller circular (male) terminal is positive, and the larger hexagonal or octagonal (female) terminal is the negative contact. The connectors on the battery are the same as on the load device; the smaller one connects to the larger one and vice versa.

9-V DC Battery

The 9-V battery format is commonly available in primary carbon-zinc and alkaline chemistry, in primary lithium iron disulfide, and rechargeable form in nickel-cadmium, nickel metal hydride, and lithium-ion.

Controller

Arduino Uno board is used as a controller which is based on ATmega328. It has 14 digital input/output pins (of which 6 can be used as PWM outputs), a 16 MHz ceramic Resonator, a USB connection, a power jack, an ICSP header and a reset button (Krishnamurthi *et al*., 2015). Arduino board is programmed via Universal Serial Bus (USB), implemented using USB-to-serial adapter chips such as the FTDI FT232 (Kale and Kulkarni, 2016). Arduino program is written by interfacing the board with a computer in order to create a programming user interface area to startup controlling tasks properly (Mahmood and Hasan, 2017).

DHT11 Sensor

DHT11 capacitive humidity sensing digital temperature and humidity module is one that contains the compound that has been calibrated digitally to signal output of the temperature and humidity sensors (Manghnani *et al*., 2017). The sensor includes a capacitive sensor, wet components, and a high-precision temperature measurement device, and connected with a high-performance 8-bit microcontroller. The product has excellent quality, fast response, strong anti-jamming capability, and high cost (Kale and Kulkarni, 2016).

Resistor

A resistor is a passive two-terminal electrical component that implements electrical resistance as a circuit element. In electronic circuits, resistors are used to reduce current flow, adjust signal levels, to divide voltages, bias active elements, and terminate transmission lines, among other uses.

LCD Screen

Liquid crystal display (LCD) is a screen to display alphanumeric characters. 16 x 2 LCD is used as a user interface. Here, 16 x 2 refers to the 16 characters in 2 lines in the module (Sipani *et al*., 2017).

Trimmer Potentiometer

A trimpot or trimmer potentiometer is a small potentiometer which is used for adjustment, tuning, and calibration in circuits. Trimpots or presets are normally mounted on printed circuit boards and adjusted by using a screwdriver.

LED Bulbs

A LED lamp or LED light bulb is an electric light for use in light fixtures that produces light using light-emitting diode (LED).

Jumper Wires

Jumper wire is an electrical wire, or group of them in a cable, with a connector or pin at each end (or sometimes without them –simply "tinned"), which is normally used to interconnect the components of a breadboard or other prototype or test circuit, internally or with other equipment or components, without soldering. Individual jump wires are fitted by inserting their "end connectors" into the slots provided in a breadboard, the header connector of a circuit board, or a piece of test equipment.

Micro SD Card Module

The micro SD card module is a simple solution for transferring data to and from a standard SD card. The pinout is directly compatible with Arduino, but can also be used with other microcontrollers. It allows for adding mass storage and data logging to the project. This module has a serial peripheral interface (SPI) interface which is compatible with any SD card, and it uses 5V or 3.3V power supply which is compatible with Arduino Uno.

Printed Circuit Board

A printed circuit board (PCB) is a predesigned copper track on a conducting sheet which mechanically supports and electrically connects, electronic components using conductive tracks, pads and other features etched from copper sheets laminated onto a non-conductive substrate. The pre-defined tracks reduce the wiring thereby reducing the faults arising due to lose connections. Simply place the components on the PCB and solder them.

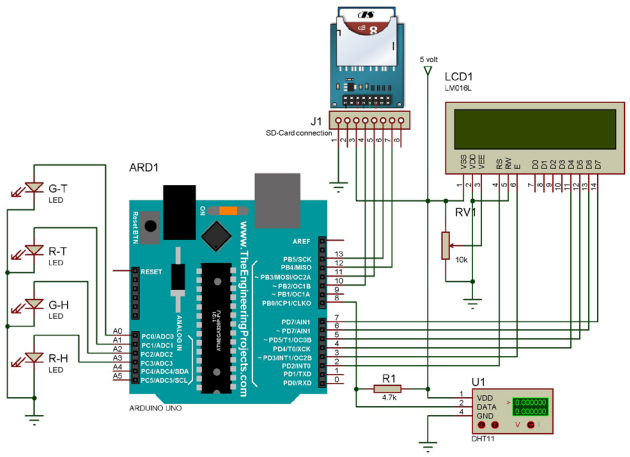

Fig. 2: Circuit diagram

Circuit Diagram

Figure 2 shows the circuit diagram of the developed temperature and humidity monitoring system. Arduino Uno board has 13 digital outputs and 6 analogs to digital converters (A0 to A5). The power (5V) can be provided to the Arduino board through the B type USB port. The DHT11 sensor, LCD, LED's and micro SD card module are connected to the Arduino Uno board.

Formulae for percent error of temperature and humidity

$$\text{Per cent error} = \frac{\text{Hygrometer Reading - Sensor Reading}}{\text{Hygrometer Reading}} \times 100$$

Results and Discussion

Developed Temperature and Humidity Monitoring System

As shown in Figure 3, the temperature and humidity monitoring system is developed using various hardware connections viz. USB type B cable, DC power jack, 9-V battery adaptor, 9-V battery, Arduino Uno, resistor, LCD, trimmer potentiometer, LED, jumper wires, micro SD card module PCB, etc.

LCD Display of Developed Temperature and Humidity Monitoring System

As shown in Figure 4, LCD displayed different comments as per the control program written in 'C' language.

Testing of developed temperature and humidity monitoring system

The testing of the developed temperature and humidity monitoring system was carried out by comparing the temperature and humidity recorded by the controller with a hygrometer. The readings were taken for one day at various time intervals at the open field and two polyhouses of the institute. Table 1 shows the controller and hydrometer readings and the percent error between them form 08:00 am to 06:00 pm at the interval of 2 hours.

From Table 1, it is observed that the controller showed the temperature with the percent error of 0-8% and humidity with the error of 0-5.97%. Thus, the developed system showed an accuracy of $\pm 2^0$C for temperature and ±4% for humidity.

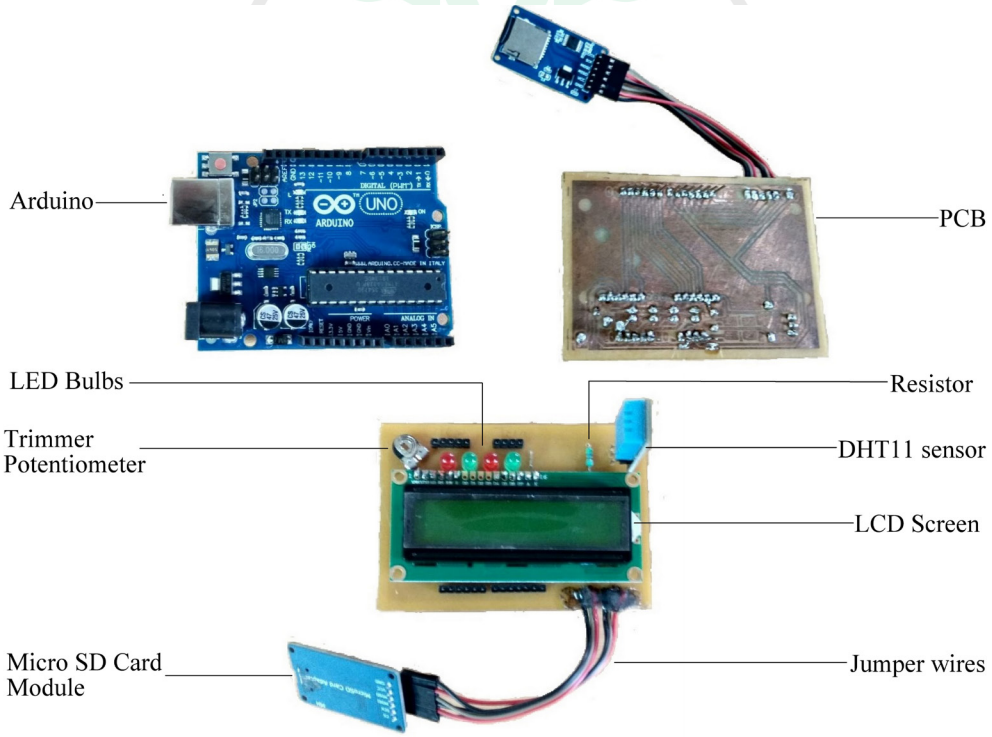

Fig. 3: Developed temperature and humidity monitoring system



Fig. 4: LCD display of developed temperature and humidity monitoring system

Table 1: Testing of developed temperature and humidity monitoring system

		Controller readings		*Hygrometer readings*		*Percent error*	
Time	*Place*	*Temperature (°C)*	*Humudity (%)*	*Temperature (°C)*	*Humudity (%)*	*Temperature (°C)*	*Humudity (%)*
8:00 am	Open field	20	89	21	88	4.76	–1.14
	Polyhouse–1	19	91	20	92	5.00	1.09
	Polyhouse–2	21	88	20	90	–5.00	2.22
10:00 am	Open field	25	70	24	74	–4.17	5.41
	Polyhouse–1	26	76	26	78	0.00	2.56
	Polyhouse–2	26	78	25	82	–4.00	4.88
12:00 pm	Open field	34	52	33	56	–3.03	7.14
	Polyhouse–1	28	65	29	63	3.45	–3.17
	Polyhouse–2	28	63	29	67	3.45	5.97
2:00 pm	Open field	37	49	37	51	0.00	3.92
	Polyhouse–1	29	64	27	68	–7.41	5.88
	Polyhouse–2	30	76	29	78	–3.45	2.56
4:00 pm	Open field	34	60	36	58	5.56	–3.45
	Polyhouse–1	29	93	28	92	–3.57	–1.09
	Polyhouse–2	30	85	29	85	–3.45	0.00
6:00 pm	Open field	30	77	31	76	3.23	–1.32
	Polyhouse–1	27	95	25	96	–8.00	1.04
	Polyhouse–2	28	93	28	92	0.00	–1.09

Cost Analysis of Developed Temperature and Humidity Monitoring System

The cost analysis of the developed temperature and humidity monitoring system was worked out as per the present market prices of different components. The cost of Arduino Uno used for development was for ₹460 while the DHT11 sensor cost ₹220. The cost of other components such as USB type B cable, adapter, DC power jack, 9-V battery connector, 9-V

DC battery, resistor, LCD screen, trimmer potentiometer, LED bulbs, jumper wires, micro SD card module, PCB, etc. were as per the present prices in the market. The total cost of the newly developed temperature and humidity monitoring system was found to be ₹1625.

Discussion

Enokela and Othoigbe, 2015 designed an automated greenhouse control system using Arduino prototype platform. The system designed by them achieved monitoring and control of a greenhouse environment by using sensors and actuators which were under the control of a microcontroller running a computer program. They concluded that the greenhouse control system was successfully designed and was meant to protect seedlings in nurseries from intruders. Kale and Kulkarni, 2016 developed real-time remote temperature and humidity monitoring using Arduino. This system had more variation of humidity parameter in night time as compared to the day time. Kunjumon *et al.,* 2016 developed temperature and humidity monitoring and alert management system. In the system developed by them, a solution was provided to monitor and get an alert of an increase in temperature or humidity. They concluded that this system can be cheaply made from low-cost locally available components and can be used to monitor and control the temperature and humidity at the data center.

Conclusion

The temperature and humidity monitoring system was designed using various components viz., Arduino Uno, DHT11 sensor, USB type B cable, adaptor, DC power jack, 9-V battery connector, 9-V DC battery, resistor, LCD screen, trimmer potentiometer, LED bulbs, jumper wires, micro SD card module, PCB, etc. The temperature and humidity monitoring system was developed at a low cost of ₹1625. The developed system showed a percent variation of 0 to 8 % for temperature and 0 to 5.97% for humidity. Thus, the system showed the accuracy of ±2°C for temperature and ± 4% for humidity.

Acknowledgment

Authors are thankful to Dr. Budhajirao Mulik College of Agricultural Engineering and Technology Mandki–Palvan, Affiliated to Dr. Balasaheb Sawant Konkan Krishi Vidyapeeth, Dapoli.

References

Enokela, J. and Othoigbe, T. (2015). An Automated Greenhouse Control System Using Arduino Prototyping Platform. Australian Journal of Engineering Research, 1-13

Kale, V. and Kulkarni, R. (2016). Real Time Remote Temperature & Humidity Monitoring Using Arduino and Xbee S2. International Journal of Innovative Researchi in Electrical, Electronics, Instrumentation and Control Engineering, 4(6): 175-179.

Krishnamurthi, K., Thapa, S., Kothari, L. and Prakash, A. (2015). Arduino Based Weather Monitoring System. International Journal of Engineering Research and General Science, 3(2): 452-458.

Kunjumon, S., Pinto, K. and Saldanha, J. (2016). Temperature and Humidity Monitoring and Alert Management System. International Journal of Engineering Research and General Science, 4(4):349-351.

Mahmood, S. and Hasan, F. (2017). Design of Weather Monitoring System Using Arduino Based Database Implementation. Journal of Multidisciplinary Engineering Science and Technology (JMEST), 4(4):7109-7117.

Manghnani, S., Chittampally, R. and Kasaram, P. (2017). Arduino Based Wireless System for Temperature and Humidity Monitoring. International Conference on Emerging Trends in Engineering, Science and Management, 521-528.

Rowinski, R. (2016). The Automated Greenhouse. Unpublished BSc. (Hons.) Thesis, School of Computer Science, University of Manchester, 10.

Saha, T., Jewel, M., Mostakim, M., Bhuiyan, N., Ali, M., Rahman, M., Ghosh, H. and Hossain, K. (2017). Construction and Development of an Automated Greenhouse System Using Arduino Uno. International Journal of Information Engineering and Electronic Business, 1-8.

Saranya, T., Rekha, P., Nirmala, P., Vijayalakshmi, P., Sushmitha, K. and Swetha, R. (2017). Zidong Polyhouse Using IOT. International Journal for Research in Applied Science and Engineering Technology, 5(2):480-484.

Shirsath, D., Kamble, P., Mane, R., Kolap, A. and More R. (2017). IOT Based Smart Greenhouse Automation Using Arduino. International Journal of Innovative Research in Computer Science and Technology. 5(2):234-238.

Sipani, J., Patel, R. and Upadhyaya, T. (2017). Temperature & Humidity Monitoring and Control System Based On Arduino and Sim900 GSM Shield. International Journal of Electrical, Electronics and Data Communication. 5(11):62-68.

Open Access This article is licensed under a Creative Commons Attribution 4.0 International License, which permits use, sharing, adaptation, distribution and reproduction in any medium or format, as long as you give appropriate credit to the original author(s) and the source, provide a link to the Creative Commons license, and indicate if changes were made. The images or other third party material in this article are included in the article's Creative Commons license, unless indicated otherwise in a credit line to the material. If material is not included in the article's Creative Commons license and your intended use is not permitted by statutory regulation or exceeds the permitted use, you will need to obtain permission directly from the copyright holder. To view a copy of this license, visit http://creativecommons.org/ licenses/by/4.0/.© The Author(s) 2019

ISSN: 0976-0547 (Online), 0253-150X (Print), Naas Rating: 4.21