RESEARCH ARTICLE Legume Research- An International Journal, Volume 46 Issue 4: 417-420 (April 2023)

Correlation and Path Coefficient Analysis for Seed Yield and its Attributing Traits in Blackgram [*Vigna mungo* (L.) Hepper]

Rajwanti Saran[1], P.P. Sharma[2], Abhay Dashora[2]

10.18805/LR-4385

ABSTRACT

Background: Blackgram is an important multipurpose grain legume. It contains high amount of protein, carbohydrate, vitamins and minerals. Productivity of this crop is still low hence efforts should make to improve the yield of blackgram by keeping knowledge about association between seed yield and its components. Thus, present investigation was aimed to determine the correlation and path coefficient analysis for seed yield and its attributing traits in blackgram [*Vigna mungo* (L.) Hepper].

Methods: In this study, thirty five diverse genotypes of blackgram were evaluated during *kharif* 2018 for fourteen quantitative traits in randomized block design with three replications at Rajasthan College of Agriculture, MPUAT, Udaipur.

Result: Significant genotypic differences were observed for all the traits studied indicating considerable amount of variation among genotypes for all the characters. The seed yield per plant exhibited highly significant and positive correlation with number of clusters per plant, number of pods per plant, pod length, biological yield per plant and harvest index both at genotypic as well as phenotypic levels. The characters namely, number of pods per plant, number of seeds per pod, biological yield per plant and pod length had high positive direct effect on seed yield per plant. Therefore, selection based on the traits *viz*., number of clusters per plant, number of pods per plant, pod length, biological yield per plant, harvest index and 100-seed weight could help in enhancing the seed yield per plant in blackgram.

Key words: Blackgram, Correlation, Path coefficient analysis.

INTRODUCTION

Blackgram [*Vigna mungo* (L.) Hepper; 2n=22], belongs to the family *Fabaceae* and sub-family Papilionaceae, is a self-pollinating diploid grain legume. It is an important multipurpose pulse crop extensively cultivated in arid, semi-arid and sub-tropics. It is also grown as inter crop, catch crop, mulch crop, green crop and mixed crop (Gandi *et al*., 2018). Blackgram is primarily grown as *Kharif* crop on account of favourable environmental conditions *i.e*. adequate solar radiations, high day temperature, high precipitation, low moisture stress, *etc*. for crop growth and development.

Blackgram plays an important role in diet and contains high seed protein (25%), carbohydrate (60%), fat (1.5%), fiber (0.9%), minerals (3.2%), amino acids and vitamins *viz*., vitamin A (retinol), B_1 (thiamine), B_2 (riboflavin), B_5 (niacin) and vitamin C. The dry seeds are good source of phosphorus, calcium and iron. It also has very high calorific value *i.e*. 347 calories per 100 g of blackgram seeds (Kamboj and Nanda, 2018). Blackgram has symbiotic association with *Rhizobium* bacteria hence it has ability to improve soil fertility through symbiotic nitrogen fixation. In India blackgram is cultivated on an area of 4.83 million hectares with a production and productivity of 3.36 million tones and 696 kg per hectare, respectively (Anonymous, 2018a). In Rajasthan it is cultivated on an area of 7.50 lakh hectare with a production and productivity of 5.29 lakh tonnes and 705 kg/ha (Anonymous, 2018b).

Generally, pulses are cultivated in *rainfed* conditions with poor and marginal land hence, have lower productivity in comparison to cereal crops. Development of high yielding cultivars requires knowledge of the existing genetic variation and also the extent of association among yield contributing characters. Yield is a complex dependent character and is contributed by several components. Correlation studies simply measures the association of yield and yield attributes and does not give the actual dependence of yield on the correlated characters. Path coefficients analysis is an effective method to determine the direct and indirect causes of association and also permits to examine the specific forces acting to produce to a given correlation.

Therefore, in the present study, an effort has been made to generate information on the association of yield with its different components measures through correlation and path analysis so that appropriate selection strategy can be formulated for evolving suitable genotypes.

[1]Rajasthan Agricultural Research Institute, Durgapura, Jaipur-302 018, Rajasthan, India.
[2]Department of Genetics and Plant Breeding, Rajasthan College of Agriculture, Maharana Pratap University of Agriculture and Technology, Udaipur-313 001, Rajasthan, India.

Corresponding Author: Rajwanti Saran, Rajasthan Agricultural Research Institute, Durgapura, Jaipur-302 018, Rajasthan, India. Email: rajwantisaran@gmail.com

How to cite this article: Saran, R., Sharma, P.P. and Dashora, A. (2023). Correlation and path coefficient analysis for seed yield and its attributing traits in blackgram [*Vigna mungo* (L.) Hepper]. Legume Research. 46(4): 417-420. doi: 10.18805/LR-4385.

Submitted: 03-04-2020 **Accepted:** 13-08-2020 **Online:** 09-11-2020

MATERIALS AND METHODS

The present investigation was conducted at Instructional Research Farm, Department of Genetics and Plant Breeding, Rajasthan College of Agriculture, MPUAT, Udaipur. The experiment was carried out with thirty-five diverse genotypes of blackgram along with two check varieties *viz*., Pratap Urd-1 and Pant Urd-31 during *kharif* 2018 in randomized block design with three replications. In each replication, genotypes were sown in a plot of 4.0 m × 0.60 m size accommodating two rows of 4 .0 metres length spaced 30 cm apart with an intra-row spacing of 10 cm. All the recommended packages of practices were followed to raise a good crop.

The observations were recorded on five randomly selected competitive plants from each plot in each replication for plant height (cm), number of branches per plant, number of clusters per plant, number of pods per plant, number of pods per cluster, pod length (cm), number of seeds per pod, seed yield per plant (g), biological yield per plant (g), harvest index (%), 100-seed weight (g) and seed protein content (%) while for days to 50 per cent flowering and days to 75 per cent maturity, the data was recorded on whole plot basis. The genotypic and phenotypic correlation coefficients were calculated by using method suggested by Al-Jibouri *et al.* (1958). The path coefficients were obtained by following the method of Dewey and Lu (1959). The seed protein content was estimated by using Micro Kjeldhal's method (1883).

RESULTS AND DISCUSSION

The analysis of variance revealed significant differences among the genotypes for most of the traits studied; indicating presence of significant variability in the materials thereby justifying the selection of the experimental materials. The phenotypic and genotypic correlation among the yield and yield components in blackgram are presented in Table 1.

Significant correlation of characters suggested that there is much scope for direct and indirect selection for further improvement. In general, the estimates of genotypic correlation coefficient were higher than their corresponding phenotypic ones thereby suggesting inherent association among the characters studied.

In the present investigation, seed yield per plant exhibited highly significant and positive correlation with number of clusters per plant, number of pods per plant, pod length, biological yield per plant and harvest index both at genotypic as well as phenotypic levels. Similar results are also in consonance with Sathvik and Lal (2018), Sohel *et al.* (2016) and Shivade *et al.* (2011). Similarly, the seed yield per plant showed significant and positive association with 100-seed weight at phenotypic level. Similar results were also reported by Rajasekhar *et al.* (2017). However, it was also observed that the seed yield per plant had significant and negative correlation with days to 50 per cent flowering at genotypic level. The present findings are also in

Table 1: Correlation coefficients among various characters in blackgram (P\G).

Character	Days to 50% flowering	Days to 75% maturity	Plant height (cm)	Number of branches/ plant	Number of clusters/ plant	Number of pods/ plant	Number of pods/ cluster	Pod length (cm)	Number of seeds/ pod (g)	Seed yield/ plant	Biological yield per plant (g)	Harvest index (%)	100-seed weight (g)	Seed protein content (%)
Days to 50% flowering		0.62**	-0.10	0.03	-0.64**	-0.49**	0.28	-0.19	0.20	-0.60**	-0.42*	-0.34*	-0.54**	0.04
Days to 75% maturity	0.51**		0.19	-0.01	-0.20	-0.55**	-0.22	0.08	0.38*	-0.23	-0.31	-0.00	-0.04	0.02
Plant height (cm)	0.16	0.25		-0.22	-0.32	-0.20	0.21	0.01	-0.02	-0.18	-0.12	-0.10	0.07	-0.10
Number of branches/plant	0.28	0.09	-0.04		0.31	-0.04	-0.31	-0.17	-0.03	-0.18	-0.07	-0.12	-0.30	-0.18
Number of clusters/plant	-0.14	-0.02	-0.14	0.38*		0.38*	-0.70**	-0.02	-0.19	0.39*	-0.01	0.46**	0.02	0.20
Number of pods/plant	-0.00	-0.19	0.03	0.16	0.43**		0.38*	0.15	-0.22	0.61**	0.33*	0.43*	-0.02	0.05
Number of pods/cluster	0.15	-0.14	0.19	-0.23	-0.62**	0.42*		0.15	0.05	0.06	0.25	-0.14	-0.09	-0.15
Pod length (cm)	0.08	0.18	0.13	-0.02	0.12	0.27	0.13		0.77**	0.47**	0.06	0.50**	-0.03	0.13
Number of seeds/pod	0.31	0.35*	0.13	0.18	-0.02	0.08	0.11	0.64**		0.24	-0.04	0.32	-0.40*	-0.11
Seed yield/plant (g)	-0.14	-0.08	-0.03	-0.01	0.35*	0.56**	0.11	0.45**	0.31		0.44**	0.78**	0.32	0.24
Biological yield per plant (g)	0.10	-0.05	0.08	0.16	0.17	0.47**	0.21	0.21	0.21	0.46**		-0.22	0.15	-0.16
Harvest index (%)	-0.23	-0.04	-0.10	-0.11	0.28	0.26	-0.05	0.33	0.18	0.75**	-0.23		0.27	0.39*
100-seed weight (g)	-0.15	0.06	0.17	-0.12	0.10	0.14	-0.04	0.07	-0.16	0.34*	0.27	0.18		0.00
Seed protein content (%)	0.26	0.13	0.04	-0.01	0.25	0.20	-0.06	0.21	0.04	0.24	0.03	0.21	0.09	

*, **Significant at 5% and 1% respectively.

Table 2: Direct and indirect effects of yield contributing characters on seed yield per plant (g).

Character	Number of branches per plant	Number of clusters per plant	Number of pods per plant	Number of pods per cluster	Pod length (cm)	Number of seeds per pod	Biological yield per plant (g)	Genotypic correlation with seed yield
Number of branches per plant	**-0.21**	-0.19	-0.04	0.31	-0.02	-0.01	-0.02	-0.18
Number of clusters per plant	-0.06	**-0.62**	0.45	0.69	-0.00	-0.06	-0.00	0.39*
Number of pods per plant	0.01	-0.24	**1.17**	-0.37	0.02	-0.08	0.09	0.61**
Number of pods per cluster	0.07	0.43	0.44	**-0.98**	0.02	0.02	0.07	0.06
Pod length (cm)	0.04	0.01	0.17	-0.15	**0.12**	0.26	0.02	0.47**
Number of seeds per pod	0.01	0.12	-0.26	-0.05	0.09	**0.34**	-0.01	0.24
Biological yield per plant (g)	0.01	0.01	0.39	-0.24	0.01	-0.01	**0.28**	0.44**

Residual = 0.5402, Bold figures in main diagonal indicate direct effects.

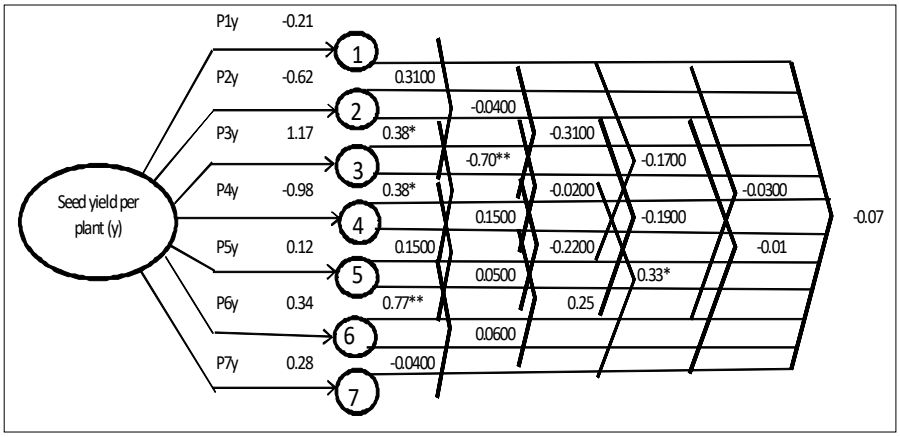

Fig 1: Genotypic path diagram for seed yield per plant.

accordance with the results of Bandi *et al*. (2018), Mathivathana *et al.* (2015) and Krishnan *et al.* (2002). Days to 50 per cent flowering had significant and negative correlation with number of clusters per plant, number of pods per plant, biological yield per plant, harvest index and 100-seed weight at genotypic level while this trait had significant and positive association with days to 75 per cent maturity both at genotypic and phenotypic level. Therefore, the seed yield per plant can be enhanced if the characters *viz*., days to 50 per cent flowering, number of clusters per plant, number of pods per plant, pod length, biological yield per plant, harvest index and 100-seed weight were given importance during selection procedure.

The result of present investigation on path coefficient analysis is presented in Table 2 and Fig 1 revealed that number of pods per plant, number of seeds per pod, biological yield per plant and pod length had high positive and direct effect on seed yield per plant. Therefore, selection for these traits would be rewarding in enhancing the productivity of blackgram. Similar findings were also reported by Bandi *et al*. (2018), Rajasekhar *et al*. (2017), Sohel *et al.* (2016), Gowsalya *et al*. (2016), Panigrahi and Baisakh (2014) and Bharti *et al.* (2013). Number of clusters per plant exhibited high positive indirect effects *via* number of pods per cluster and number of pods per plant. The value of residual effect (0.54) indicates that there may be some other secondary components that should not be ignored.

CONCLUSION

In the light of above findings, it may be concluded that improvement in the characters like number of clusters per plant, number of pods per plant, number of seeds per pod, pod length, biological yield per plant, harvest index and 100-seed weight will help in improving the seed yield in blackgram both directly and indirectly. Therefore, these characters should be considered for yield improvement in blackgram breeding programme.

REFERENCES

Al-Jibouri, H.A., Miller, P.A. and Robinson, H.F. (1958). Genotypic and Environmental variance in upland cotton of interspecific Origin. Agronomy Journal. 50: 633-663.

Anonymous, (2018a). Directorate of Economics and Statistics, Department of Agriculture, Co-operation and Farmers Welfare, Ministry of Agriculture, Govt. of India, New Delhi, 2018-19. (Statistical Cell).

Anonymous, (2018b). Directorate of Economics and Statistics, Department of Agriculture, Co-operation and Farmers Welfare, Ministry of Agriculture, Govt. of India, New Delhi, 2018-19. (Statistical Cell).

Bandi, H.R.K., Rao, K.N., Krishna, K.V. and Srinivasulu, K. (2018). Correlation and path co-efficient estimates of yield and yield component traits in rice fallow blackgram [*Vigna mungo* (L.) Hepper]. International Journal of Current Microbiology and Applied Sciences. 7: 3304-3309.

Bharti, B., Kumar, R., Bind, H.N., Kumar, A. and Sharma, V. (2013). Correlation and path analysis for yield and its components in blackgram (*Vigna mungo* L.). Society for Science Development in Agriculture and Technology. 8: 473-476.

Dewey, D.R. and Lu, K.H. (1959). A correlation and path coefficient analysis of components of wheat grass seed production. Journal of Agronomy. 51: 515-518.

Gandi, R., Shunmugavalli, N. and Muthuswamy (2018). Genetic variability, heritability and genetic advance analysis in segregating population of blackgram [*Vigna mungo* (L.) Hepper]. International Journal of Current Microbiology and Applied Sciences. 7: 703-709.

Gowsalya, P., Kumaresan, D., Packiaraj, D. and Kannanbapu, J.R. (2016). Genetic variability and character association for biometrical traits in blackgram [*Vigna mungo* (L.) Hepper]. Electronic Journal of Plant Breeding. 7: 317-324.

Kamboj, R. and Nanda, V. (2018). Proximate composition, nutritional profile and health benefits of legumes- A review. Legume Research. 41: 325-332.

Kjeldahl, J. (1883). A new method for the estimation of nitrogen in organic compounds. Journal of Annals Chemistry. 22: 366.

Krishnan, A.G., Shekar, M.R., Reddy, K.R. and Reddy, K.S. (2002). Character association and path analysis in urdbean [*Vigna mungo* (L.) Hepper]. Madras Agricultural Journal. 89: 315-318.

Mathivathana, M.K., Shunmugavalli, N., Muthuswamy, A. and Vijulan Harris, C. (2015). Correlation and path analysis in blackgram. Agricultural Science Digest. 35: 158-160.

Panigrahi, K.K. and Baisakh, B. (2014). Genetic divergence, variability and character association for yield components of blackgram [*Vigna mungo* (L.] Hepper]. Trends in Biosciences. 7: 4098-4105.

Rajasekhar, D., Lal, S.S. and Lal, G.M. (2017). Character association and path analysis for seed yield and its components in blackgram [*Vigna mungo* (L.) Hepper]. Plant Archives. 17: 467-471.

Sathvik, D. and Lal, G.M. (2018). Correlation and path coefficient analysis for yield and yield attributing characters in blackgram [*Vigna mungo* (L.) Hepper]. International Journal of Agriculture Sciences. 10: 6559-6560.

Shivade, H.A., Rewale, A.P. and Patil, S.B. (2011). Correlation and path analysis for yield and yield components in blackgram [*Vigna mungo* (L.) Hepper]. Legume Research. 34: 178-183.

Sohel, M.H., Miah, M.R., Mohiuddin, S.J., Sajjadul Islam, A.K.M., Rahman, M.M. and Haque, M.A. (2016). Correlation and path coefficient analysis of blackgram [*Vigna mungo* (L.) Hepper]. Journal of Bioscience and Agriculture Research. 7: 621-629.