RESEARCH ARTICLE Legume Research- An International Journal, Volume 47 Issue 12: 2135-2140 (December 2024)

Design and Development of Solar Operated Plot Thresher for Chickpea Crop

Naveen Kumar[1], Ajay Kumar Sharma[2], Dayanand Kumbar[3]

10.18805/LR-4827

ABSTRACT

Background: Energy is a fundamental input to farm operations. In chickpea cultivation, threshing consumed the highest energy (266.05 MJ/ha) out of which 79 per cent (211.16 MJ/ha) is contributed by diesel (Sahu, 2005). As solar energy is available in abundance, it is the most secure of all sources in energy security point of view. India is endowed with enormous solar potential. Approximately 5,000 trillion kW-h per year energy is incident over India's land area with most parts receiving 4-7 kW-h/m^2/day.

Methods: A portable solar operated plot thresher for chickpea crop was developed with 24 V, 750 W DC motor powered by 24 V, 960 W solar panels. The thresher was evaluated at different levels of independent parameters *viz*. cylinder speed (8, 10, 12 m/s), concave clearance (10, 12, 14 mm) and concave grate clearance (8, 9, 10 mm). Various dependent parameters *viz*. threshing efficiency, cleaning efficiency, seed damage, threshing capacity, power consumption and seed germination were assessed.

Result: At optimum combination of parameters, threshing efficiency, cleaning efficiency, seed damage and seed germination were 99.73, 99.75, 0.33 and 98.67%, respectively. The power consumption and threshing capacity were 666 W and 32.39 kg/h, respectively.

Key words: Chickpea, FCCCD, Plot thresher, Solar.

INTRODUCTION

In India, chick pea (*Cicer arietinum*) is an important pulse crop commonly known as gram or bengal gram which ranks third in the importance list of food legumes cultivated throughout the world. It is cultivated in more than 50 countries in the world. The global production of chickpeas in 2018 was 17.2 MT over 17.8 M ha of land. India is the largest producer of chickpea with production of 11.8 MT in 2018. In the nation, chickpea is cultivated in the rain-fed areas as they are well suited for its cultivation (Sharma and Mishra, 2009). More than 90 per cent of gram production in the country during the period 2017-18 has been acknowledged by 10 states specifically Madhya Pradesh, Maharastra, Rajasthan, Uttar Pradesh, Andhra Pradesh, Karnataka, Gujarat, Chhatishgarh, Jharkhand and Telangana (Anonymous, 2018).

Recent hike in prices has led to a rise in demand for legumes (Merga *et al*., 2019). There is a critical call for enhancing seed production of improved varieties to ensure ample availability of superior seed to the farmers. In any seed production program, seed processing is a basic component which targets improving the seed qualities. The aim of the threshing process is to separate the seed from the pods which can be accomplished through stripping, scouring, impact action or utilizing a blend of these actions. Threshing can be performed manually (trampling, beating), using animal power or mechanical threshers. Methods of threshing affect germination and vigour of the seed (Kausal *et al*., 1992). A multi-crop thresher with spike tooth threshing cylinder was developed and evaluated at CIAE, Bhopal powered by a 5 hp electric motor or diesel engine (Singh *et al*., 2008). An experimental plot seed thresher was designed, developed and evaluated for wheat crop at CIAE research farm. In this thresher, threshing was done by friction of the ear-heads of the crop between two rolling belts having corrugations. The threshing efficiencies and cleaning efficiencies ranged between 97.33 to 98.62 per cent and 97.08 to 97.94 per cent respectively (Kumar, 2003). Plot thresher is a small capacity machine exceptionally designed to thresh trial plots at seed farms. This can be valuable in threshing individual plots with high precision and no seed damage. As such, no special plot thresher is available for threshing of chickpea crop. Moreover, the solar operated plot thresher will facilitate the threshing operation even in absence of electricity in isolated plots which will be advantageous in timely threshing of the research plots.

[1]CCS Haryana Agricultural University, Hisar-125 004, Harynana, India.
[2]MBM University, Jodhpur-342 011, Rajasthan, India.
[3]Department of Farm Machinery and Power Engineering, Maharana Pratap University of Agriculture and Technology, Udaipur-313 001, Rajasthan, India.

Corresponding Author: Naveen Kumar, CCS Haryana Agricultural University, Hisar-125 004, Harynana, India.
Email: nvn.ccshau@gmail.com

How to cite this article: Kumar, N., Sharma, A.K. and Kumbar, D. (2024). Design and Development of Solar Operated Plot Thresher for Chickpea Crop. Legume Research. 47(12): 2135-2140. doi: 10.18805/LR-4827.

Submitted: 01-11-2021 **Accepted:** 03-02-2022 **Online:** 15-04-2022

MATERIALS AND METHODS

The study was conducted at Department of Farm Machinery and Power Engineering, MPUAT, Udaipur in the year 2020.

A solar operated plot thresher for chickpea was designed and developed based on the engineering properties of chickpea seeds (Kumar and Sharma, 2021). It has spike tooth threshing cylinder with provision of altering cylinder speed, concave clearance and stroke length of sieve assembly. The unit was designed to be operated with 24 V, 750 W DC motor having rated speed of 1700 rpm which is driven by solar panels of 960 W. Schematic drawings of major parts of the thresher are shown in Fig 1.

Threshing cylinder

Spike tooth cylinder was reported to be the most efficient for agricultural crops because of less energy consumption and less damage to seeds (Bainer *et al.,* 1960; Kaul and Kumar, 1975). Peksen *et al.* (2013) reported maximum threshing efficiency for spike-tooth type beater. Therefore, spike tooth cylinder was selected for developing solar operated plot thresher for chickpea. Based on reviews for the development of solar operated plot thresher for chickpea, the maximum peripheral speed of 12 m/s was selected with maximum 820 rpm.

Diameter of cylinder

The diameter was determined as suggested by Kanafoski and Karwowski (1976) as under:
The peripheral speed (v_c) was given by:

$$v_c = \frac{\pi \times D_c \times N_c}{60}$$

Where,
D_c = Diameter, m.
N_c = Rotations, rpm.

$$D_c = \frac{60 \times v}{\pi \times N} = 0.28 \text{ m}$$

For (v_c = 12 m/s) and N_c = 820 rpm, the diameter of cylinder comes out to be,

$$D_c = \frac{60 \times 12}{\pi \times 820} = 0.28 \text{ m}$$

Maximum permissible feed rate (Q)

Assuming transmission efficiency as 90 per cent, the power available for threshing was 675 W. The power available for threshing cylinder was assumed as 70 per cent of available power which was 675 × 0.70 = 472.5 W. The rest of the power will be used to run cleaning unit.

According to Varshney *et al.,* (2004), the maximum energy required for threshing chickpea crop was 4.5 kW-h/t. The maximum permissible feed rate (Q) was calculated as under:

$$Q = \frac{\text{Power available (kW)} \times 1000}{3600 \times \text{Energy required per tonn of crop (kW-h/t)}}$$

$$Q = \frac{0.472 \times 1000}{3600 \times 4.5} = 0.029 \text{ kg/s}$$

Length of threshing cylinder

The allowable feed rate was assumed to be 50 per cent of the maximum feed rate which was 0.0145 kg/s and eight number of spike rows were selected (Dogra *et al.,* 2014, Pathak, 2016). The length of cylinder was calculated as below:

$$Q = q \times l_c \times M$$

Where,
l_c = Length of cylinder, m.
M = No. of spike rows.

$$0.029 = 0.0145 \times l_c \times 8$$
$$l_c = 0.250 \text{ m}$$

Therefore, the designed diameter including spike height of 70 mm and length of threshing cylinder was 280 mm and 250 mm, respectively. A total of 36 round spikes having diameter of 10 mm and spike height of 70 mm were bolted to a closed cylinder in staggered manner in 4 paired row including 4 serrated triangular blades welded to 4 spikes in opposite rows for better chopping of crop material.

Diameter of cylinder shaft

To determine the cylinder shaft diameter, the weights of the cylinder and transmission pulleys were taken as 14 kg and 4 kg, respectively. Torque required for the shaft, was calculated as under:

$$P = \frac{2\pi NT}{4500}$$

$$T = \frac{P \times 4500}{2\pi NT}$$

Where,
T = Torque requirement by transmission shaft, kg m.
P = Power requirement, hp.

The calculated torque (T) for 1 hp power transmission at maximum 820 rpm was 0.8738 kg m or 87.38 kg cm. Assuming the distance of cylinder (starting point of cylinder) and pulley on the cylinder shaft were 25 cm and 13 cm, respectively from one end of the shaft.
Maximum bending moment (M) at the shaft:

$$M = (14 \times 25) + (4 \times 13)$$
$$M = 402 \text{ kg cm}$$

Total load required (Te) at the shaft:

$$Te^2 = M^2 + T^2$$
$$Te^2 = 402^2 + 87.38^2$$
$$Te = 411.39 \text{ kg cm}$$

To determine diameter of the shaft:

$$T_e = \pi \times f_s \times \frac{d^3}{16}$$

Where,
f_s = Maximum allowable stress for M. S. shaft, 350 kg/cm^2.
d = Shaft diameter, cm.

$$411.38 = \pi \times 350 \times \frac{d^3}{16}$$
$$d = 1.82 \text{ cm} = 18.2 \text{ mm}$$

Taking factor of safety as 1.40, the shaft diameter was obtained as 25.4 mm.

Feeding hopper and top cover

Design guidelines of bureau of Indian standards (BIS-IS: 9020 (B)-2002) were considered for operator's safety and

smooth feeding of the crop. The feeding hopper was welded to the top cover of the threshing cylinder hinged to main frame of the thresher which can be lifted up for visual observations and cleaning of the space between threshing cylinder and concave. A flat plate was hinged in the feeding hopper to stop the grains throwing out through feeding hopper during threshing. Three square bars of thickness 6 mm were welded parallel to axis on inner side of the top cover to act as rubbing surface for threshing of the crop. The overall length of top cover including side collars was kept as 330 mm, width as 270 mm and the radius of curvature as 210 mm.

Concave

The concave in spike tooth type cylinders should have the

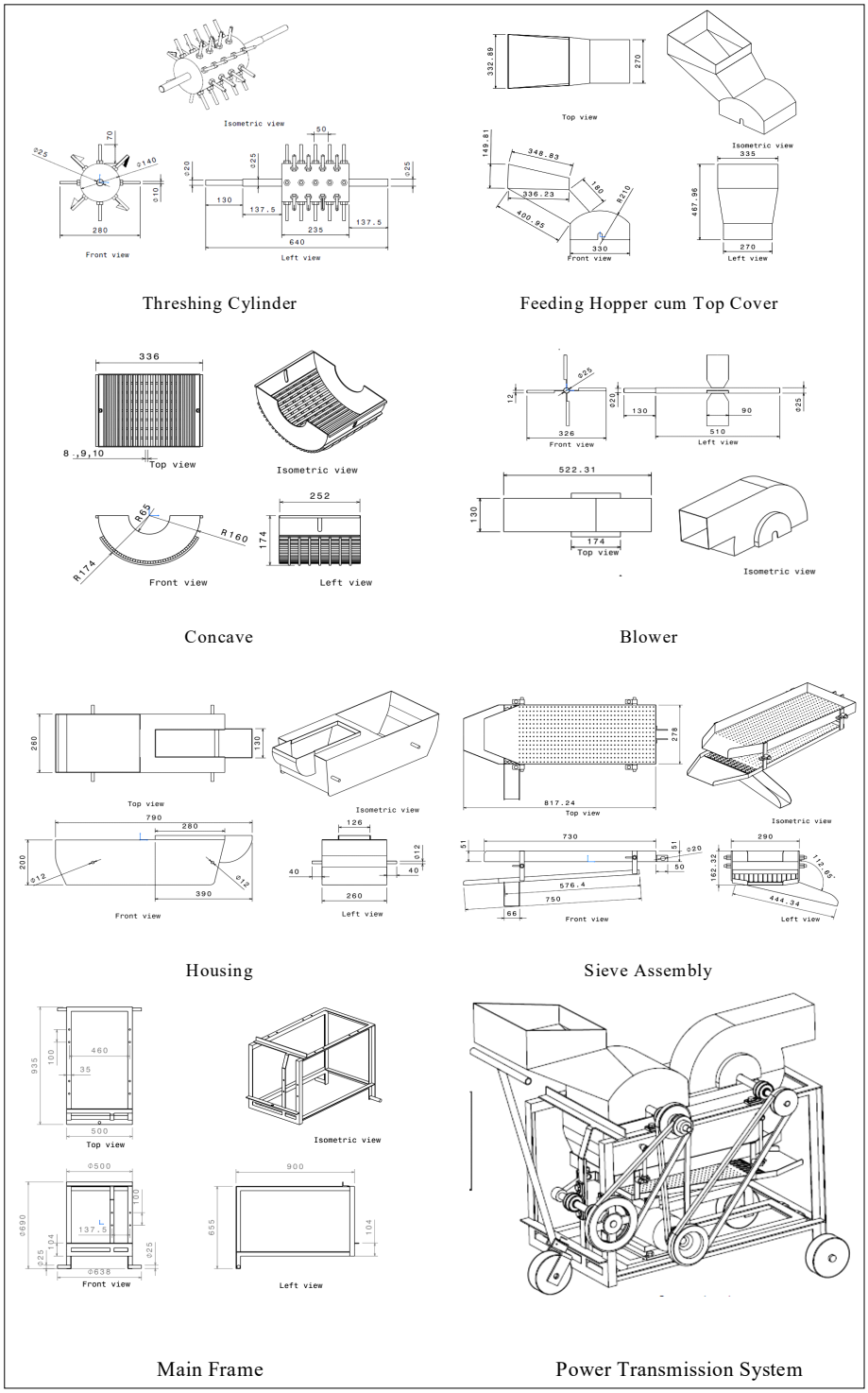

Fig 1: Schematic drawings of major parts of solar operated plot thresher.

peripheral width equal to 1/3 to 5/12 of cylinder periphery (Chakraverty *et al.,* 2003). Based on this reference, the highest value was considered and calculated as below:

$$\text{Peripheral width} = \frac{5}{12} \times \pi \times D_c$$

$$= 0.416 \times 3.14 \times 0.280$$

$$= 0.365 \text{ m}$$

The concave was built of 6 mm square bars welded on two semicircular plates. On both end of concave, mild steel plate was welded to fix it to cylinder housing under the cylinder with bolts and 30 mm long slot was provided to adjust the concave clearance. Seven semicircular 6 mm square bars were placed radially to support the concave bars on bottom side at an equal spacing. For the study, three different concaves having grate clearance of 8, 9 and 10 mm were fabricated. The overall size of all the concave with side plates was 336 × 252 × 174 mm.

Blower

A centrifugal fan consisting of four blades made from M.S. sheet was placed in the blower casing and air channels were provided in the housing to suck the material from top sieve. The diameter and width of the fan were 326 and 90 mm, respectively. A square outlet of size 130 mm × 130 mm was provided in the top cover of blower casing. The blower was provided behind the threshing cylinder on a parallel shaft. The chaff and straw were sucked by the blower from the top sieve and blown away through chaff outlet.

Sieve assembly

The sieve assembly consisted of three sieves. It was driven by an eccentric drive with provision to alter the stroke length. The top sieve of 10 mm openings separated the larger pieces of straw from seeds. The seeds passed through the top sieve to the bottom sieve of 4 mm openings which removed the fine particles (dust, chaff, *etc.*). The seeds passing over the bottom sieve were passed through a third sieve of 10 mm openings mounted above the seed outlet which further separated the remaining larger size chaff material.

Main frame

The main frame was fabricated using M.S. angle of size 35 × 35 × 5 mm. Cylinder, concave assembly, housing, sieve assembly, blower, eccentric drive assembly, transport wheels, handle, safety cover for transmission system, DC motor and power switch were mounted on main frame. The main frame was 935 mm long, 500 mm wide and 655 mm in height.

Power transmission system

Belt and pulleys were used for transmission of power from DC motor to different shafts. The primary mover unit was mounted at lower portion of the frame to protect it from the dust during threshing as well as to ensure the operator's safety. The power to cylinder and blower shaft was transmitted separately using pulley and 'V' belts. The power to oscillating sieve assembly was supplied from cylinder shaft. The cylinder speeds were achieved using two different pulleys of diameters 157.0 and 127.0 mm in combination with 50.8 to 76.2 mm grooves of the step up pulley. The power to the blower shaft was provided through the 127 mm diameter groove of the step up pulley fitted on the motor shaft to the 101.6 mm pulley fitted on the blower shaft. The power from cylinder shaft was further provided to eccentric drive which oscillates the sieve assembly using 76.2 mm pulley fitted on the cylinder shaft to the 177.8 mm pulley fitted on the eccentric drive shaft.

Solar panel, charge controller and battery

Three solar panels of 24 V, 320 W each were mounted on a separate foldable and portable stand. Solar charge controller is a device which regulates the power supply from solar panels to DC load and batteries. A PWM type solar charge controller of rated voltage 24 V and current limit 35 A was used to regulate the PV current and voltage for operating the thresher and to charge the batteries. Two 12V, 26Ah sealed lead-acid batteries were connected in series to overcome the fluctuation in the solar PV output due to sudden shading, so that the current supply to the DC motor remains constant. Fig 2 presents the CAD drawings of solar operated plot thresher with wiring connections.

The developed plot thresher was evaluated on three levels each of cylinder speed (8, 10, 12 mm), concave clearance (10, 12, 14 mm) and concave grate clearance (8, 9, 10 mm) selected as per reviews (Rani *et al.*, 2001; Khazaei *et al.*, 2003; Sinha *et al.*, 2009, Salari *et al.,* 2013) for chickpea threshing at Instructional Farm, CTAE, MPUAT,

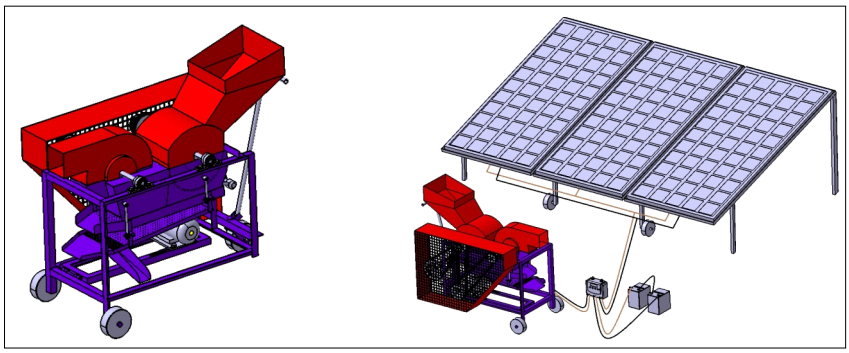

Fig 2: CAD drawings of the solar operated plot thresher.

Udaipur. The experiments were designed using design expert 11.1.0.1 software by applying face centered central composite design (FCCCD).

RESULTS AND DISCUSSION

The threshing performances were evaluated in terms of threshing efficiency (%), cleaning efficiency (%), seed damage (%), power consumption (W), output capacity (kg/h) and seed germination (%). Fig 3 shows threshing of chickpea using solar operated plot thresher.

The threshed samples of seed were analyzed for visible seed damages and losses. Germination tests were conducted as per methods prescribed by (ISTA, 1999) to check the germination (%) of seed for each trial shown in Fig 4. With different combinations of independent parameters, the threshing efficiency, cleaning efficiency, seed damage and seed germination were found to be in range from 99.30 to 99.99%, 99.55 to 99.95%, 0.20 to 1.31% and 85.67 to 99.67%, respectively.



Fig 3: Threshing by solar operated plot thresher.

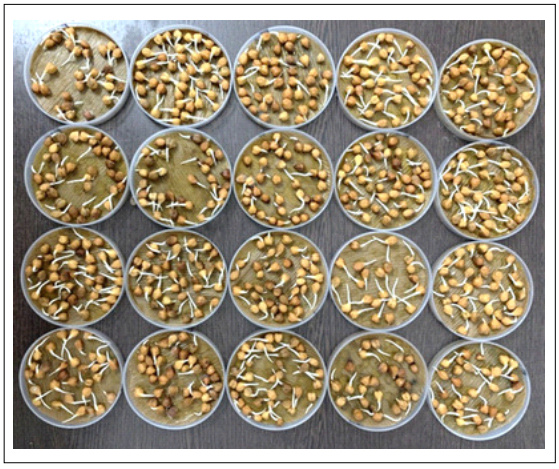

Fig 4: Seed samples under germination test.

The threshing capacity and power consumptions were varied from 27.96 to 34.89 kg/h and 545.22 to 689.19 W, respectively. Higher seed damage at higher cylinder speed with lower concave and concave grate clearance due to high impact and frictional forces caused lower seed germination as reported by Ajav and Adejumo, (2005); Rani *et al.* (2001); Sinha *et al.* (2009) and Salari *et al.* (2013).

From the trial data, the combination having the highest seed germination and threshing efficiency was observed at cylinder speed, concave clearance and concave grate clearance of 10 m/s, 12 mm and 10 mm, respectively. At this condition, the values of performance parameters *viz.* threshing efficiency, cleaning efficiency, seed damage and seed germination were 99.73, 99.75, 0.33 and 98.67%, respectively. The power consumption and threshing capacity were 666 W and 32.39 kg/h, respectively.

CONCLUSION

A solar operated plot thresher for chickpea crop was developed according to engineering properties of chickpea seeds which can effectively thresh, clean and collect seeds from chickpea research plot with minimum seed damage saving time and labour. The major components were feeding and threshing unit, aspirator blower, sieve assembly, seed outlet, DC motor, solar panels, charge controller, batteries and power switch. At optimum combination of parameters, threshing efficiency, cleaning efficiency, seed damage and seed germination were 99.73, 99.75, 0.33 and 98.67%, respectively. The power consumption and threshing capacity were 666 W and 32.39 kg/h, respectively. The design and results of the plot thresher will be useful for researchers at seed farms.

Conflict of interest

All authors declared that there is no conflict of interest.

REFERENCES

Ajav, E.A. and Adejumo, B.A. (2005). Performance Evaluation of an Okra Thresher. Agricultural Engineering International: The CIGR Ejournal. Manuscript PM 04006, 7. October, 2005.

Anonymous. (2018). DES, Ministry of Agri. and FW (DAC and FW), Govt. of India. 2017-18*- III Advance Estimate.

Bainer, R., Barger, E.L. and Kepner, R.A. (1960). Principles of Farm Machinery. III Edition, CBS Publishers, Liverpool, UK.

Chakraverty, A., Mujumdar, A.S., Raghavan, G.S., Vijay and Ramaswamy, H.S. (2003). Hand book of post harvest technology. Marcel Dekker, Inc. New York. Basel.

Dogra, B., Dogra. R., Kaur, R., Kumar, D. and Manes, G.S. (2014). Optimization of Operational parameters of multi-crop spikes tooth thresher for threshing black gram. Journal of Food Legumes. 27(2): 130-135.

Kanafojski, Cz. and Karwowski, T. (1976). Agricultural Machines, Theory and construction (vol. 2). U.S. Department of Agricultural and the National Science Foundation, Washington D.C.

Kaul, R.N. and Kumar, R. (1975). Types and usage of wheat threshers in Punjab. Publication No. FPM-1/75, Deptt. of Farm Power and Machinery, PAU, Ludhiana.

Kausal, R.T., Chanpade, S.P. and Patil, V.N. (1992). Evaluation of threshing methods for assessing seed quality in soybean. Seed Res. 20(1): 44-46.

Khazaei, J., Behrouzi lar, M., Rajabipour, A. and Mohtasebi, S. (2003). Effect of impact velocity, moisture content and pod size on percentage of damaged grains and threshed pods in a finger type combine thresher. Iran. J. Agric. Sci. 34: 825-836.

Kumar. (2003). Design, development and evaluation of experimental plot seed thresher. M. Tech Thesis Submitted to Indira Gandhi Agricultural University, Raipur.

Kumar, N. and Sharma, A.K. (2021). Study on engineering properties of chickpea (*Cicer arietinum*) seeds in relation to design of threshing mechanism. The Pharma Innovation Journal. 10(9): 455-458.

Merga, B., Haji, J. and Fatih Y. (2019). Economic importance of chickpea: Production, value and world trade, Cogent Food and Agriculture. 5: 1-12.

Pathak, S.V. (2016). Studies on Machine and Operational Parameters of Spike Threshing Mechanism for Cumin [*Cuminum cyminum* (L.) Crop.] Ph. D. thesis submitted to Maharana Pratap University of Agriculture and Technology, Udaipur, Rajasthan.

Peksen, E., Koyuncu, T., Artik, C., Sessiz, A. and Pinar, Y. (2013). Seed viability and yield of chickpea (*Cicer arietinum*) cultivars threshed by different types of beaters and concaves. International Journal of Agricultural Biology. 15: 76-82.

Rani, M., Banal, N.K., Dahiya, B.S. and Kashyap, R.K. (2001). Optimization of machine-crop parameters to thresh seed crop of chickpea. Int. J. Agril. Engg. 10(3 and 4): 151-164.

Sahu, R.K. (2005). Assessment of losses and energy requirement in different post harvest operations of chickpea. Unpublished M. Tech thesis. Indira Ganghi Agricultural University, Raipur.

Salari, K., Chayjan, Amiri, R., Khazaei, J. and Parian, Amiri J. (2013). Optimization of independent parameters for chickpea threshing using Response Surface Method (RSM). J. Agr. Sci. Tech. 15: 467-477.

Sharma, H. and Mishra, P.K. (2009). An Economic Analysis of Chickpea and its Value Added Products in Agri Export Zone for Pulses of Madhya Pradesh. JNKV, Jabalpur. Study. 97: 1-45.

Singh, K.P., Kumar, M., Kumar, A. and Srivastva, A.K. (2008). Effect of wire loop spacing, tip height anal threshing drum speed on threshing performances of pedal operated VL paddy thresher. Journal of Agricultural Engineering. 45(I): 12-16.

Sinha, J.P., Dhaliwal, I.S. and Sinha, S.N. (2009). Effect of machine parameters on threshing quality for seed crop of chickpea. J. of Agric. Engg. 46(4): 1-10.

Varshney, A.C., Tiwari, P.S., Narang, S. and Mehta, C.R. (2004). Data Book on Agricultural Machinery Design. Central Institute of Agricultural Engineering, Bhopal.